US&R SHORING OPERATIONS GUIDE

TABLE OF CONTENTS

The following Sections are contained in this SOG. Each Section has an Outline that gives the order in which subjects are presented.

NO.	CONTENTS of SECTION	
1	Hazard I.D. and Failure Modes by Building Type US&R Field Communication Procedures FEMA US&R Marking System FEMA US&R Shoring Symbols Design Loads & Quick Weight Estimating	1
2	Vertical Shoring Construction, Graphics and Step by Step Text	2
3	Lateral Shoring Construction, Graphics and Step by Step Text	3
4	Repair & Strengthening Techniques Shoring Frequently Asked Questions Glossary of Terms Useful Engineering Tables	4
R	Disaster Site Information for Rescue Specialist Rescue Team Mgr & Rescue Squad Officer Duties Medevac Proceedures BOO Requirements Initial Rescue Site Tasks Sample Forms	R

4th Edition
July 2015

US&R SHORING OPERATIONS GUIDE

TABLE OF CONTENTS

The following Sections are contained in this SOG. Each Section has an Outline that gives the order in which subjects are presented.

NO.	CONTENTS of SECTION	
1	Hazard I.D. and Failure Modes by Building Type US&R Field Communication Procedures FEMA US&R Marking System FEMA US&R Shoring Symbols Design Loads & Quick Weight Estimating	1
2	Vertical Shoring Construction, Graphics and Step by Step Text	2
3	Lateral Shoring Construction, Graphics and Step by Step Text	3
4	Repair & Strengthening Techniques Shoring Frequently Asked Questions Glossary of Terms Useful Engineering Tables	4
R	Disaster Site Information for Rescue Specialist Rescue Team Mgr & Rescue Squad Officer Duties Medevac Proceedures BOO Requirements Initial Rescue Site Tasks Sample Forms	R

4th Edition
July 2015

DEFINITIONS of ENGINEERING TERMS

Kips or K – 1000 pounds

Tons or T – 2000 pounds

Breaking Strength – Force required to cause complete failure of a structure, given in pounds, Kips or Tons, usually associated with Wire Rope.

Ultimate Strength (also Ultimate Load & Ultimate Capacity) – Force required to cause complete failure of a structure, given in pounds or Kips.

Design Load (also **Design Strength** & **Design Capacity**) – Some fraction of Ultimate Strength that is used to determine the Size or Number of Structural Components (posts, etc.) to support a Load at Low Risk of Collapse.

Working Load, **Safe Working Load** – same as **Design Load**

Design Factor, Safety Factor – Ultimate Strength divided by Design Load. This Factor may be as high as 10 to 20 when using Wire Rope or Climbing Rope to suspend humans. For most building structures, it is normally not less than about 3.

Design Factor for Wood Structures – due to the variation in the quality of any grade and species of wood it is difficult to predict the Design Factor for any individual shore built using the guidelines of this document.

- The Shoring Squad should select the posts for straightness of grain and minimum number of knots.
- The lumber should be good quality Douglas Fir or Southern Pine (if not, the reductions in strength noted in Sect 4, FAQ, should be applied). Note that pressure treating Douglas Fir & Southern Pine does not significantly reduce strength.
- When nailing 2x lumber with 16d nails one must avoid splitting in order to maintain joint integrity. In cases where 16d are closely spaced, the 16d coated cooler nail (.148" x 3.25") is preferred.
- For more Definitions, see Sect. 4, Glossary, of this document.

US&R SHORING
OPERATIONS GUIDE (SOG)

DEFINITIONS of ENGINEERING TERMS

Kips or K – 1000 pounds

Tons or T – 2000 pounds

Breaking Strength – Force required to cause complete failure of a structure, given in pounds, Kips or Tons, usually associated with Wire Rope.

Ultimate Strength (also Ultimate Load & Ultimate Capacity) – Force required to cause complete failure of a structure, given in pounds or Kips.

Design Load (also **Design Strength** & **Design Capacity**) – Some fraction of Ultimate Strength that is used to determine the Size or Number of Structural Components (posts, etc.) to support a Load at Low Risk of Collapse.

Working Load, **Safe Working Load** – same as **Design Load**

Design Factor, Safety Factor – Ultimate Strength divided by Design Load. This Factor may be as high as 10 to 20 when using Wire Rope or Climbing Rope to suspend humans. For most building structures, it is normally not less than about 3.

Design Factor for Wood Structures – due to the variation in the quality of any grade and species of wood it is difficult to predict the Design Factor for any individual shore built using the guidelines of this document.

- The Shoring Squad should select the posts for straightness of grain and minimum number of knots.
- The lumber should be good quality Douglas Fir or Southern Pine (if not, the reductions in strength noted in Sect 4, FAQ, should be applied). Note that pressure treating Douglas Fir & Southern Pine does not significantly reduce strength.
- When nailing 2x lumber with 16d nails one must avoid splitting in order to maintain joint integrity. In cases where 16d are closely spaced, the 16d coated cooler nail (.148" x 3.25") is preferred.
- For more Definitions, see Sect. 4, Glossary, of this document.

INTRODUCTION to SECTION 1

This section contains Documents that are Useful References for the US&R Disaster Site, listed as follows:

- Hazard I.D. & Failure Modes by Bldg Type Page 1-2
- US&R Field Communication Procedures 1-16
- On-Site Emergency Signaling Procedures 1-18
- US&R Building Marking System 1-19
- FEMA US&R Shoring Symbols 1-31
- Design Loads & Quick Weight Estimating 1-32

HAZARD I.D. and FAILURE MODE SUMMARY

The following pages contain brief descriptions and graphics of the most common building classifications used for US&R Evaluations:

Building Types are:

Wall Systems	Frame Systems
Light Frame, multi-story	Heavy Floor, C.I.P.
Heavy Wall, URM & Tilt-Up	Heavy Steel Bldgs
Precast Buildings	Light Metal Bldgs

Pages for each bldg type present the characteristics, typical failure modes, hazards, check points, plus hazard reduction and victim access suggestions.

CRITICAL ISSUES:

- Buildings may be varied, of combined types, and complicated.
- Focus on determining the amount of Potential Energy that remains (heavy structure/objects that can collapse or fall.
  - Important to separate Brittle from Ductile Behavior.
  - Judgments may not be able to be precise.
  - Partial collapse is most difficult to assess.
- Make judgments based on what type of forces are expected after initial event (aftershock, high winds, etc).
- Victim Survivability is highly dependent on void formations, void stability, and void accessibility.
- One should always consider Risk/Reward Ratio.
- The viability of the various Mitigation Choices is dependent on the potential for Ductile Behavior of the damaged structure.

US&R SHORING OPERATIONS GUIDE
DISASTER SITE REFERENCE DATA

INTRODUCTION to SECTION 1

This section contains Documents that are Useful References for the US&R Disaster Site, listed as follows:

- Hazard I.D. & Failure Modes by Bldg Type Page 1-2
- US&R Field Communication Procedures 1-16
- On-Site Emergency Signaling Procedures 1-18
- US&R Building Marking System 1-19
- FEMA US&R Shoring Symbols 1-31
- Design Loads & Quick Weight Estimating 1-32

1

HAZARD I.D. and FAILURE MODE SUMMARY

The following pages contain brief descriptions and graphics of the most common building classifications used for US&R Evaluations:

Building Types are:

Wall Systems	Frame Systems
Light Frame, multi-story	Heavy Floor, C.I.P.
Heavy Wall, URM & Tilt-Up	Heavy Steel Bldgs
Precast Buildings	Light Metal Bldgs

Pages for each bldg type present the characteristics, typical failure modes, hazards, check points, plus hazard reduction and victim access suggestions.

CRITICAL ISSUES:

- Buildings may be varied, of combined types, and complicated.
- Focus on determining the amount of Potential Energy that remains (heavy structure/objects that can collapse or fall.
  - Important to separate Brittle from Ductile Behavior.
  - Judgments may not be able to be precise.
  - Partial collapse is most difficult to assess.
- Make judgments based on what type of forces are expected after initial event (aftershock, high winds, etc).
- Victim Survivability is highly dependent on void formations, void stability, and void accessibility.
- One should always consider Risk/Reward Ratio.
- The viability of the various Mitigation Choices is dependent on the potential for Ductile Behavior of the damaged structure.

1-1

MULTI-STORY LIGHT FRAME BUILDING - HAZARDS

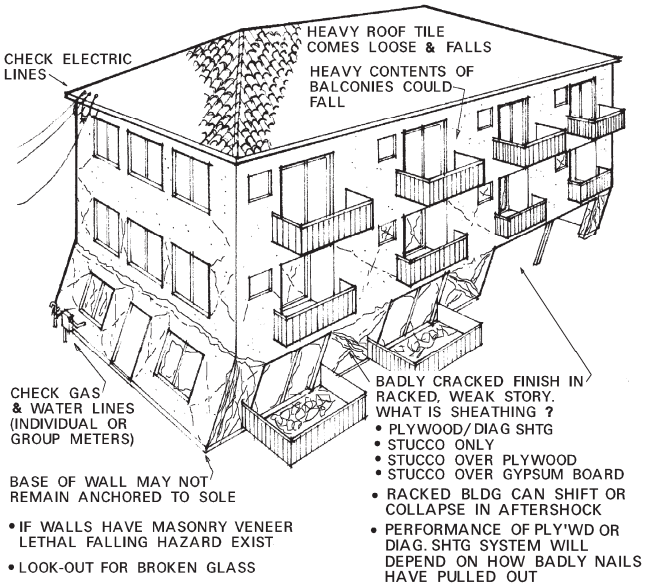

CHARACTERISTICS

- Mostly wood frame, box type – up to 4 stories.
- Residential or Light Commercial.

KEY PERFORMANCE ASPECTS

- Many walls create redundant structures w/ductile failure modes, dependant on sheathing type.
- Presence of concrete floor fill can enhance possibility of P-delta collapse.

TYPICAL FAILURE MODES

- Failure in Wall Sheathing – Racking of Walls.
- Failure should be slow and noisy.
- Soft/Weak stories can rack and collapse.

COMMON COMBINATIONS

- Many are built over R/C parking garages.

US&R SHORING OPERATIONS GUIDE
DISASTER SITE REFERENCE DATA

MULTI-STORY LIGHT FRAME BUILDING - HAZARDS

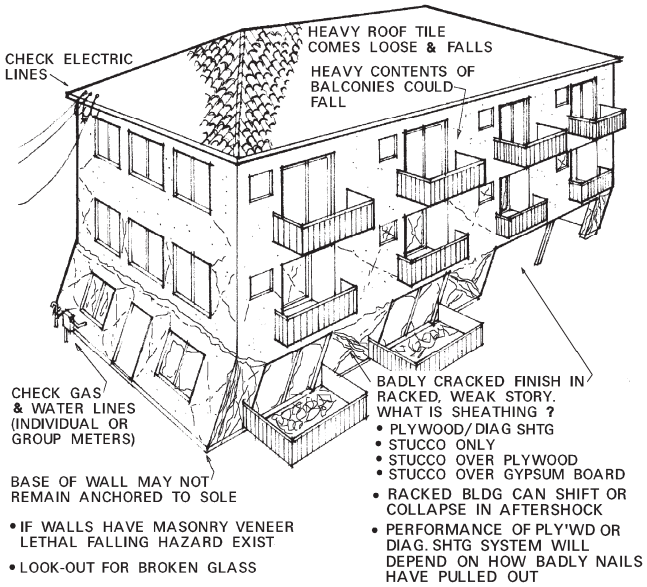

CHARACTERISTICS

- Mostly wood frame, box type – up to 4 stories.
- Residential or Light Commercial.

KEY PERFORMANCE ASPECTS

- Many walls create redundant structures w/ductile failure modes, dependant on sheathing type.
- Presence of concrete floor fill can enhance possibility of P-delta collapse.

TYPICAL FAILURE MODES

- Failure in Wall Sheathing – Racking of Walls.
- Failure should be slow and noisy.
- Soft/Weak stories can rack and collapse.

COMMON COMBINATIONS

- Many are built over R/C parking garages.

1-2

MULTI-STORY LIGHT FRAME BUILDING (continued)

EXPECTED PERFORMANCE – for the following:

- **Progressive Collapse** – Extensive connection failures. Members & components are likely to remain intact.
- **E. Quake** – Generally good performance - common failure is ductile racking of first story. Racked stories are subject to ratcheting and P-delta collapse in Aftershocks.
- **Explosion** – Walls become disconnected from floors (horizontal diaphragms), leading to part or total collapse.
- **Fire** – Rapid combustion and collapse unless fire resistant.
- **High Energy Impact** – Little resistance to collapse in immediate area. Remainder of structure remains stable.
- **Wind** – Damage is highly dependent on wind speed vs. shape and proper detailing. Tornados can destroy even well constructed wood buildings.
- **Struct Overload/Defect** – Roof failures due to snow, especially on longer span roofs.

CHECK POINTS

- Badly cracked and/or leaning walls.
- Leaning first story in multi-story buildings.
- Cracked, leaning/loose veneer or chimney.
- Offset of building from foundation.
- Separated porches, split level floors/roof.
- Connection failures - nail pullout/bolt pull-through.

HAZARD REDUCTION

- Shut off gas and reduce other fire hazards.
- Avoid or pull-down damaged veneer and chimneys.
- Place vertical and/or lateral (diagonal) shores.
- Monitor changes in racked/leaning structures.

VICTIM ACCESS

- Vertical access through floor/roof from above collapsed area.
- Horizontal entry through existing cavities, or through walls.
- Remove or shore hazards near victims, if required.

US&R SHORING OPERATIONS GUIDE
DISASTER SITE REFERENCE DATA

MULTI-STORY LIGHT FRAME BUILDING (continued)

1

EXPECTED PERFORMANCE – for the following:

- Progressive Collapse – Extensive connection failures. Members & components are likely to remain intact.
- E. Quake – Generally good performance - common failure is ductile racking of first story. Racked stories are subject to ratcheting and P-delta collapse in Aftershocks.
- Explosion – Walls become disconnected from floors (horizontal diaphragms), leading to part or total collapse.
- Fire – Rapid combustion and collapse unless fire resistant.
- High Energy Impact – Little resistance to collapse in immediate area. Remainder of structure remains stable.
- Wind – Damage is highly dependent on wind speed vs. shape and proper detailing. Tornados can destroy even well constructed wood buildings.
- Struct Overload/Defect – Roof failures due to snow, especially on longer span roofs.

CHECK POINTS

- Badly cracked and/or leaning walls.
- Leaning first story in multi-story buildings.
- Cracked, leaning/loose veneer or chimney.
- Offset of building from foundation.
- Separated porches, split level floors/roof.
- Connection failures - nail pullout/bolt pull-through.

HAZARD REDUCTION

- Shut off gas and reduce other fire hazards.
- Avoid or pull-down damaged veneer and chimneys.
- Place vertical and/or lateral (diagonal) shores.
- Monitor changes in racked/leaning structures.

VICTIM ACCESS

- Vertical access through floor/roof from above collapsed area.
- Horizontal entry through existing cavities, or through walls.
- Remove or shore hazards near victims, if required.

1-3

HEAVY WALL- URM BUILDING - HAZARDS

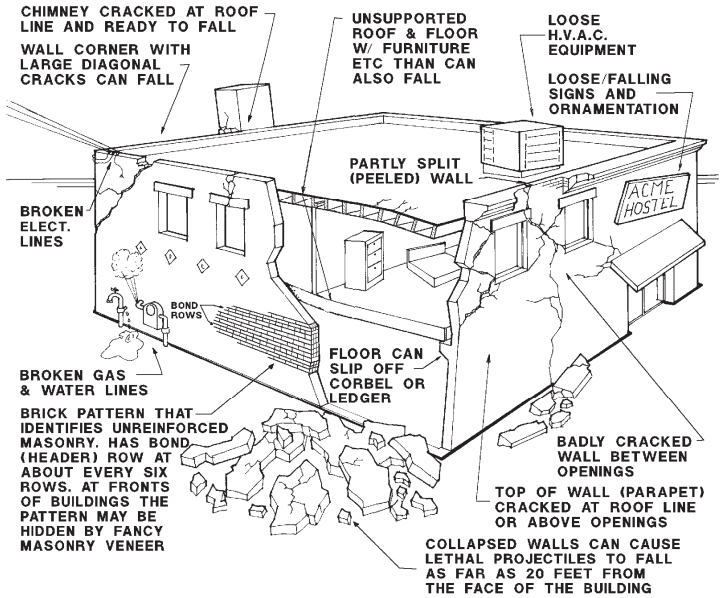

CHARACTERISTICS

- URM Ext walls, wood floors/roof - box type – to 8 stories.
- Lack of wall strap anchors – Red Brick & CMU low-rise.
- Residential, Commercial and Industrial occupancies.

KEY PERFORMANCE ASPECTS

- Walls Brittle with little resistance to unanticipated loads.
- Redundant interior walls may prevent floor collapse.

TYPICAL FAILURE MODES

- Walls separate from roof/floors, leading to falling walls and collapsed roof/floors.
- Cracked/peeled walls create brittle falling hazards.

COMMON COMBINATIONS

- Heavy timber, light frame walls & floors.
- Steel joist floors w/concrete fill in multi-story buildings.

US&R SHORING OPERATIONS GUIDE
DISASTER SITE REFERENCE DATA

HEAVY WALL- URM BUILDING - HAZARDS

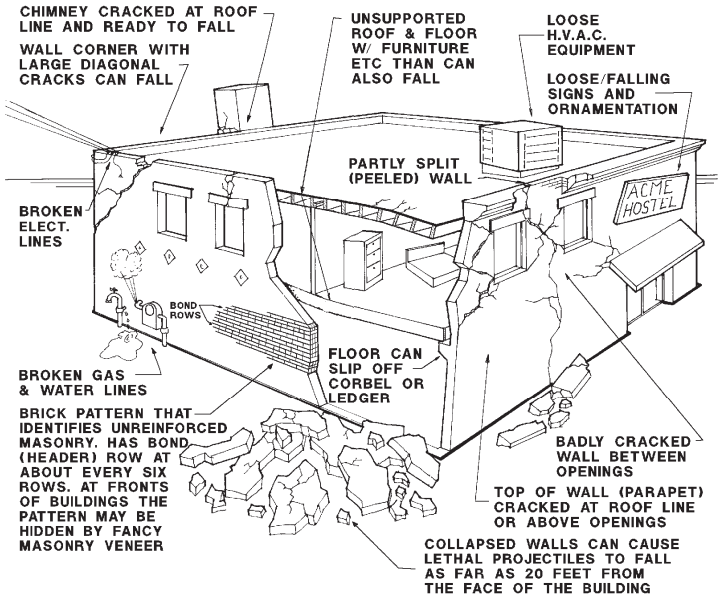

CHARACTERISTICS

- URM Ext walls, wood floors/roof - box type – to 8 stories.
- Lack of wall strap anchors – Red Brick & CMU low-rise.
- Residential, Commercial and Industrial occupancies.

KEY PERFORMANCE ASPECTS

- Walls Brittle with little resistance to unanticipated loads.
- Redundant interior walls may prevent floor collapse.

TYPICAL FAILURE MODES

- Walls separate from roof/floors, leading to falling walls and collapsed roof/floors.
- Cracked/peeled walls create brittle falling hazards.

COMMON COMBINATIONS

- Heavy timber, light frame walls & floors.
- Steel joist floors w/concrete fill in multi-story buildings.

1-4

HEAVY WALL- URM BUILDING (continued)

EXPECTED PERFORMANCE – for the following:

- **Progressive Collapse** – URM walls likely to disintegrate, and interior structure may stand independently.
- **E. Quake** - Poor performance - out of plane ext wall failures, loss of connection to floors leading to partial or total collapse. Many lethal Aftershock falling and collapse hazards.
- **Explosion** – Walls become disconnected from floors (horizontal diaphragms), leading to part or total collapse.
- **Fire** – Loss of roof/floors will leave walls unbraced. Collapsing roof/floors can thrust walls in or out.
- **High Energy Impact** – Ext URM walls disintegrate upon impact leaving lethal falling hazards & possible floor collapse. **Massive masonry is more resistant.**
- **Wind** – Roof vulnerable to uplift, leading to partial or total collapse or roof & walls. Massive masonry is more resistant.
- **Struct Overload/Defect** – Roof failures due to ponding and snow. Wood decay, brick disintegration or remodeling in older buildings.

CHECK POINTS

- Loose, broken parapets and ornamentation.
- Connections between exterior walls and roof/floors.
- Cracked wall corners and openings, plus peeled walls.
- Unsupported and partly collapsed roof/floors.

HAZARD REDUCTION

- Shut off gas and reduce other fire hazards.
- Diagonally shore. tie-back, avoid, remove hazardous walls.
- Shore hazardous roof/floor beams, etc.
- Monitor changes in racked/leaning structures.

VICTIM ACCESS

- Vertical access through floor/roof from above collapsed area.
- Horizontal entry through existing cavities and openings.
- Remove bricks by hand, excavator, or crane w/clamshell.
- Remove or shore hazards near victims, if required.

US&R SHORING OPERATIONS GUIDE
DISASTER SITE REFERENCE DATA

HEAVY WALL- URM BUILDING (continued)

EXPECTED PERFORMANCE – for the following:

- Progressive Collapse – URM walls likely to disintegrate, and interior structure may stand independently.
- E. Quake - Poor performance - out of plane ext wall failures, loss of connection to floors leading to partial or total collapse. Many lethal Aftershock falling and collapse hazards.
- Explosion – Walls become disconnected from floors (horizontal diaphragms), leading to part or total collapse.
- Fire – Loss of roof/floors will leave walls unbraced. Collapsing roof/floors can thrust walls in or out.
- High Energy Impact – Ext URM walls disintegrate upon impact leaving lethal falling hazards & possible floor collapse. Massive masonry is more resistant.
- Wind – Roof vulnerable to uplift, leading to partial or total collapse or roof & walls. Massive masonry is more resistant.
- Struct Overload/Defect – Roof failures due to ponding and snow. Wood decay, brick disintegration or remodeling in older buildings.

CHECK POINTS

- Loose, broken parapets and ornamentation.
- Connections between exterior walls and roof/floors.
- Cracked wall corners and openings, plus peeled walls.
- Unsupported and partly collapsed roof/floors.

HAZARD REDUCTION

- Shut off gas and reduce other fire hazards.
- Diagonally shore. tie-back, avoid, remove hazardous walls.
- Shore hazardous roof/floor beams, etc.
- Monitor changes in racked/leaning structures.

VICTIM ACCESS

- Vertical access through floor/roof from above collapsed area.
- Horizontal entry through existing cavities and openings.
- Remove bricks by hand, excavator, or crane w/clamshell.
- Remove or shore hazards near victims, if required.

1-5

1

HEAVY WALL- TILT-UP BUILDING - HAZARDS

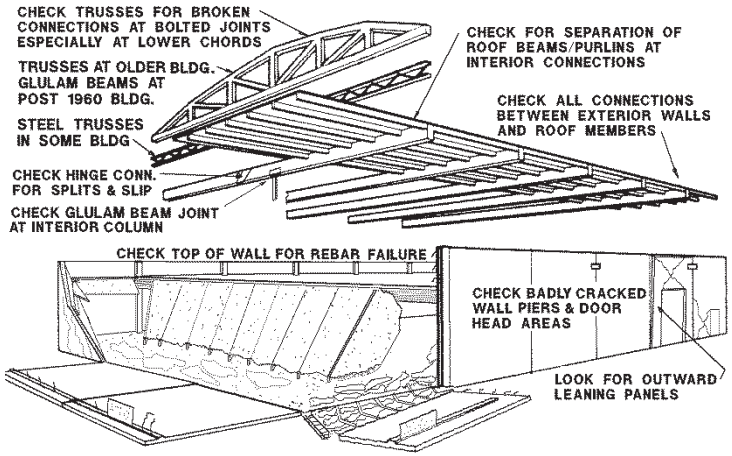

CHARACTERISTICS

- Conc. ext walls, wood floors/roof, some steel fl w/concrete fill.
- Long span roof (50ft+) and floors (25ft+).
- Similar performance with CIP conc. or reinforced CMU walls.
- Office, Commercial & Lt Industrial occupancies – to 4 stories.

KEY PERFORMANCE ASPECTS

- Robust ext walls, but may have weak connection to roof.
- Post 1995 and retrofit building should perform better.

TYPICAL FAILURE MODES

- Walls separate from roof/floors, leading to falling walls and collapsed roof/floors. Long span collapse is probable.

COMMON COMBINATIONS

- Light frame walls & floors – 1.5″concrete fill on floors.
- Steel joist, long span floors w/concrete fill.

US&R SHORING OPERATIONS GUIDE
DISASTER SITE REFERENCE DATA

HEAVY WALL- TILT-UP BUILDING - HAZARDS

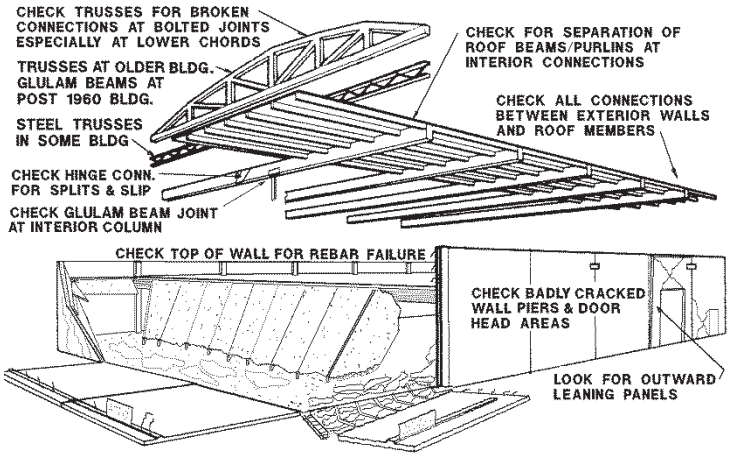

CHARACTERISTICS

- Conc. ext walls, wood floors/roof, some steel fl w/concrete fill.
- Long span roof (50ft+) and floors (25ft+).
- Similar performance with CIP conc. or reinforced CMU walls.
- Office, Commercial & Lt Industrial occupancies – to 4 stories.

KEY PERFORMANCE ASPECTS

- Robust ext walls, but may have weak connection to roof.
- Post 1995 and retrofit building should perform better.

TYPICAL FAILURE MODES

- Walls separate from roof/floors, leading to falling walls and collapsed roof/floors. Long span collapse is probable.

COMMON COMBINATIONS

- Light frame walls & floors – 1.5″concrete fill on floors.
- Steel joist, long span floors w/concrete fill.

1-6

HEAVY WALL- TILT UP BUILDING (continued)

EXPECTED PERFORMANCE – for the following:

- **Progressive Collapse** – Out-leaning wall/walls could progress to roof/floor collapse in bay adjacent to exterior. Remainder could stand independently – but poorly braced.
- **E. Quake** – Pre 1995 - poor performance – out of plane ext wall failures, loss of connection to roofs leading to partial or total collapse. Lethal Aftershock falling and collapse hazards.
- **Explosion** – Walls become disconnected from floors (horizontal diaphragms), leading to part or total collapse.
- **Fire** – Loss of roof/floors will leave walls unbraced. Collapsing roof/floors can thrust walls in or out.
- **High Energy Impact** – Impact on exterior walls likely to be localized. Could lead to localized roof/floor collapse.
- **Wind** – Roof vulnerable to uplift, leading to partial or total collapse or roof and walls. Penetration through large doors can lead to critical uplift and blow-out pressures.
- **Struct Overload/Defect** – Roof failures due to ponding and snow. Wood decay in older buildings.

CHECK POINTS

- Connections between exterior walls and roof/floors.
- Beam to beam and other interior roof connections.

HAZARD REDUCTION

- Diagonal or Raker shore concrete walls.
- Shore hazardous roof/floor beams, etc.
- May pull-down leaning walls after dealing w/roof support.
- Monitor changes in racked/leaning structures.

VICTIM ACCESS

- Vertical access through floor/roof from above collapsed area. Horizontal entry through existing cavities and openings.
- Cut holes in wall panels, 2 feet min. from joints.
- Remove large wall panels and roof sections by crane.

US&R SHORING OPERATIONS GUIDE
DISASTER SITE REFERENCE DATA

HEAVY WALL- TILT UP BUILDING (continued)

1

EXPECTED PERFORMANCE – for the following:

- Progressive Collapse – Out-leaning wall/walls could progress to roof/floor collapse in bay adjacent to exterior. Remainder could stand independently – but poorly braced.
- E. Quake – Pre 1995 - poor performance – out of plane ext wall failures, loss of connection to roofs leading to partial or total collapse. Lethal Aftershock falling and collapse hazards.
- Explosion – Walls become disconnected from floors (horizontal diaphragms), leading to part or total collapse.
- Fire – Loss of roof/floors will leave walls unbraced. Collapsing roof/floors can thrust walls in or out.
- High Energy Impact – Impact on exterior walls likely to be localized. Could lead to localized roof/floor collapse.
- Wind – Roof vulnerable to uplift, leading to partial or total collapse or roof and walls. Penetration through large doors can lead to critical uplift and blow-out pressures.
- Struct Overload/Defect – Roof failures due to ponding and snow. Wood decay in older buildings.

CHECK POINTS

- Connections between exterior walls and roof/floors.
- Beam to beam and other interior roof connections.

HAZARD REDUCTION

- Diagonal or Raker shore concrete walls.
- Shore hazardous roof/floor beams, etc.
- May pull-down leaning walls after dealing w/roof support.
- Monitor changes in racked/leaning structures.

VICTIM ACCESS

- Vertical access through floor/roof from above collapsed area. Horizontal entry through existing cavities and openings.
- Cut holes in wall panels, 2 feet min. from joints.
- Remove large wall panels and roof sections by crane.

1-7

PRECAST BUILDINGS - HAZARDS

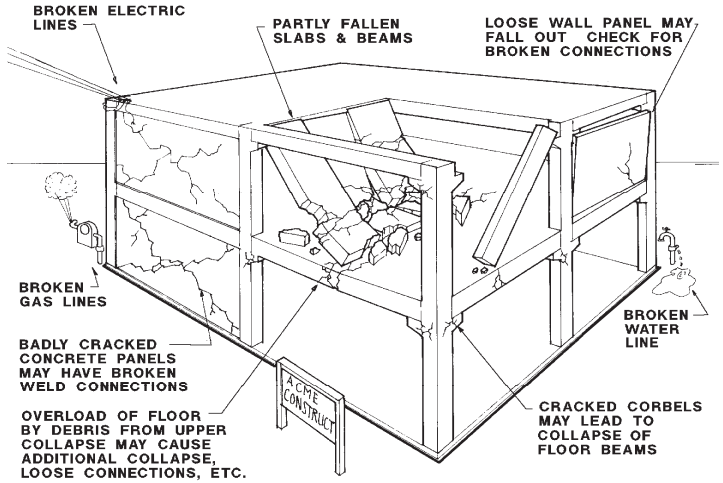

AFTERSHOCKS ARE LIKELY TO CAUSE LARGE, LOOSELY CONNECTED CONCRETE PARTS TO SHIFT AND FALL. DEBRIS PILES OF LARGE CONCRETE PARTS CAN ALSO SHIFT AND TRAP RESCUE WORKERS. BE ESPECIALLY CAREFUL OF STANDING STRUCTURES WITH OUT OF PLUMB COLUMNS SINCE ADDITIONAL COLLAPSE IS MORE PROBABLE THAN OTHER TYPES OF STRUCTURES.

CHARACTERISTICS

- Factory built lightweight concrete parts – up to 14 stories.
- Systems w/o interior concrete panels are greatest problem.

KEY PERFORMANCE ASPECTS

- Highly engineered systems, but often brittle connections.
- Little capacity for unanticipated loads.
- Residence type may be highly redundant due to many walls.

TYPICAL FAILURE MODES

- Failure of interconnections between parts leading to partial or total collapse, depending on redundancy.

COMMON COMBINATIONS

- May have CIP floor slabs or reinforced concrete topping.
- Use of Reinforced Masonry shear walls and metal stud walls.
- PC is used as floor panels in masonry & steel buildings.

US&R SHORING OPERATIONS GUIDE
DISASTER SITE REFERENCE DATA

PRECAST BUILDINGS - HAZARDS

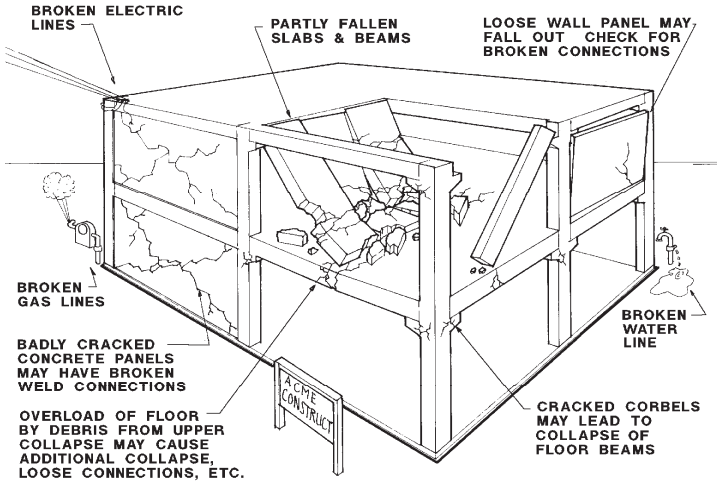

AFTERSHOCKS ARE LIKELY TO CAUSE LARGE, LOOSELY CONNECTED CONCRETE PARTS TO SHIFT AND FALL. DEBRIS PILES OF LARGE CONCRETE PARTS CAN ALSO SHIFT AND TRAP RESCUE WORKERS. BE ESPECIALLY CAREFUL OF STANDING STRUCTURES WITH OUT OF PLUMB COLUMNS SINCE ADDITIONAL COLLAPSE IS MORE PROBABLE THAN OTHER TYPES OF STRUCTURES.

CHARACTERISTICS

- Factory built lightweight concrete parts – up to 14 stories.
- Systems w/o interior concrete panels are greatest problem.

KEY PERFORMANCE ASPECTS

- Highly engineered systems, but often brittle connections.
- Little capacity for unanticipated loads.
- Residence type may be highly redundant due to many walls.

TYPICAL FAILURE MODES

- Failure of interconnections between parts leading to partial or total collapse, depending on redundancy.

COMMON COMBINATIONS

- May have CIP floor slabs or reinforced concrete topping.
- Use of Reinforced Masonry shear walls and metal stud walls.
- PC is used as floor panels in masonry & steel buildings.

1-8

PRECAST BUILDINGS (continued)

EXPECTED PERFORMANCE – for the following:

- **Progressive Collapse** – Failed single story columns have lead to progressive collapse. Heavy elements vs. brittle connections are critical issues. Members retain strength.
- **E. Quake** – Very poor performance – except for multi-wall residence buildings. Failed connections lead to partial or total collapse. Aftershock falling, shifting and collapse hazards.
- **Explosion** – Poor performance due to weak-link connections leading to part or total collapse.
- **Fire** – Could cause annealing of tendons and prestress loss.
- **High Energy Impact** – Impact on ext elements likely to be localized. Brittle connections could be damaged.
- **Wind** – Unlikely to be damaged by wind. Exterior skin and curtain walls could be damaged/destroyed.
- **Struct Overload/Defect** – Failures in connections, leading to cascading structure failure. Members should retain integrity.

CHECK POINTS

- Beam/column connections, broken welds and cracked corbels.
- Column cracking at top, bottom and wall joints.
- Wall connections at floors, columns and foundation.
- Badly cracked walls and columns plus falling hazards.

HAZARD REDUCTION

- Remove/avoid leaning/hanging, concrete elements.
- Shore damaged roof/floor beams, especially next to bad columns.
- Remove/shore unstable wall and floor elements.
- Monitor changes in racked/leaning structures.

VICTIM ACCESS

- Vertical access through thin horizontal sections from above.
- Horizontal entry through existing cavities and openings.
- Cut holes in wall panels, 2 feet min. from joints.
- Carefully remove large wall/floor sections by crane.

US&R SHORING OPERATIONS GUIDE
DISASTER SITE REFERENCE DATA

PRECAST BUILDINGS (continued)

1

EXPECTED PERFORMANCE – for the following:

- Progressive Collapse – Failed single story columns have lead to progressive collapse. Heavy elements vs. brittle connections are critical issues. Members retain strength.
- E. Quake – Very poor performance – except for multi-wall residence buildings. Failed connections lead to partial or total collapse. Aftershock falling, shifting and collapse hazards.
- Explosion – Poor performance due to weak-link connections leading to part or total collapse.
- Fire – Could cause annealing of tendons and prestress loss.
- High Energy Impact – Impact on ext elements likely to be localized. Brittle connections could be damaged.
- Wind – Unlikely to be damaged by wind. Exterior skin and curtain walls could be damaged/destroyed.
- Struct Overload/Defect – Failures in connections, leading to cascading structure failure. Members should retain integrity.

CHECK POINTS

- Beam/column connections, broken welds and cracked corbels.
- Column cracking at top, bottom and wall joints.
- Wall connections at floors, columns and foundation.
- Badly cracked walls and columns plus falling hazards.

HAZARD REDUCTION

- Remove/avoid leaning/hanging, concrete elements.
- Shore damaged roof/floor beams, especially next to bad columns.
- Remove/shore unstable wall and floor elements.
- Monitor changes in racked/leaning structures.

VICTIM ACCESS

- Vertical access through thin horizontal sections from above.
- Horizontal entry through existing cavities and openings.
- Cut holes in wall panels, 2 feet min. from joints.
- Carefully remove large wall/floor sections by crane.

1-9

HEAVY FLOOR BLDGS (CIP non-DUCTILE) - HAZARDS

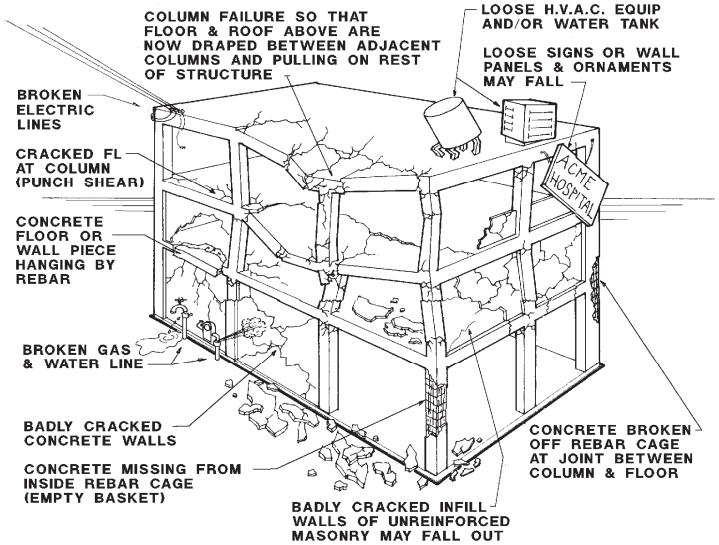

CHARACTERISTICS

- Cast in Place (CIP) concrete frames and highway structures, – up to 12 stories.
- Few concrete walls, but URM infill in older buildings.
- Eastern US – (Western pre 1975) Office & Commercial.

KEY PERFORMANCE ASPECTS

- Brittle failure modes when loaded beyond capacity.
- Post 1975 Ductile Frames in western US have systems that can absorb considerable energy w/o loss of integrity.

TYPICAL FAILURE MODES

- Beam-column joint failure or column shear leading to partial or total collapse.
- Collapse can be partial or complete pancake.

COMMON COMBINATIONS

- May have URM and/or metal stud wall partitions.

US&R SHORING OPERATIONS GUIDE
DISASTER SITE REFERENCE DATA

HEAVY FLOOR BLDGS (CIP non-DUCTILE) - HAZARDS

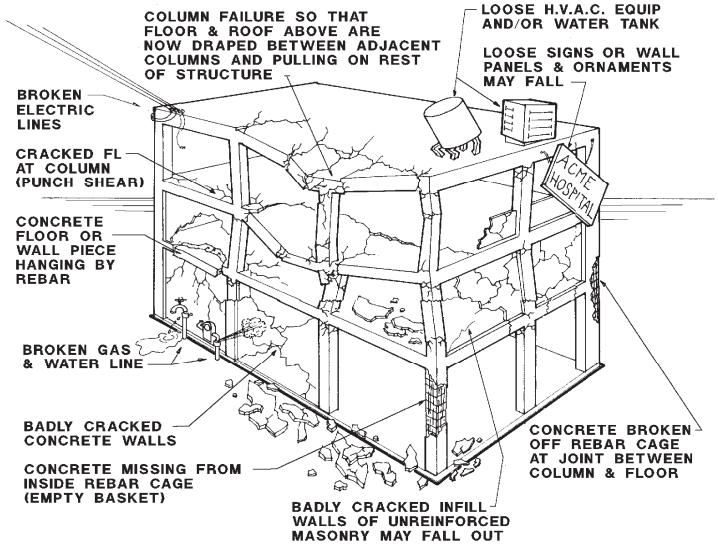

CHARACTERISTICS

- Cast in Place (CIP) concrete frames and highway structures, – up to 12 stories.
- Few concrete walls, but URM infill in older buildings.
- Eastern US – (Western pre 1975) Office & Commercial.

KEY PERFORMANCE ASPECTS

- Brittle failure modes when loaded beyond capacity.
- Post 1975 Ductile Frames in western US have systems that can absorb considerable energy w/o loss of integrity.

TYPICAL FAILURE MODES

- Beam-column joint failure or column shear leading to partial or total collapse.
- Collapse can be partial or complete pancake.

COMMON COMBINATIONS

- May have URM and/or metal stud wall partitions.

1-10

HEAVY FLOOR BLDGS (CIP non-DUCTILE) (continued)

EXPECTED PERFORMANCE – for the following:

- **Progressive Collapse** – Members likely to break into smaller pieces. Rubble piles may shift.
- **E. Quake** – Very poor performance – Brittle failures of columns and beam/column connections, leading to partial or pancake collapse. Aftershocks cause added collapse, falling hazards and shifting.
- **Explosion** – Poor slab performance due to reverse gravity loading can lead to loss of column stability and collapse.
- **Fire** – May cause spalling of concrete cover on all elements.
- **High Energy Impact** – Damage limited to area of impact. Could leave damaged members of questionable strength.
- **Wind** – Unlikely to be damaged by wind. Exterior skin and curtain walls could be damaged/destroyed.
- **Struct Overload/Defect** –Construction falsework failures most common. Members break into pieces w/poor integrity.

CHECK POINTS

- Beam/column connections above and below floors.
- Badly confined concrete in columns (empty basket).
- Diag. shear cracks in beams and cracking in slabs near cols.
- Attachment of URM walls and other heavy objects.
- Cracks in concrete shear walls and stairs.

HAZARD REDUCTION

- Shore/avoid badly cracked slabs, beams and/or column.
- Shore/avoid overloaded slabs due to punching shear.
- Remove/shore unstable wall and floor elements.
- Monitor changes in racked/leaning structures.

VICTIM ACCESS

- Vertical access through existing access shafts.
- Vertical access by cutting through slabs from above victims.
- Horizontal entry through existing cavities and openings.
- Cut non-bearing/infill walls after careful assessment.
- Remove large pieces by crane, after rebar has been cut.

.

US&R SHORING OPERATIONS GUIDE
DISASTER SITE REFERENCE DATA

HEAVY FLOOR BLDGS (CIP non-DUCTILE) (continued)

EXPECTED PERFORMANCE – for the following:

- Progressive Collapse – Members likely to break into smaller pieces. Rubble piles may shift.
- E. Quake – Very poor performance – Brittle failures of columns and beam/column connections, leading to partial or pancake collapse. Aftershocks cause added collapse, falling hazards and shifting.
- Explosion – Poor slab performance due to reverse gravity loading can lead to loss of column stability and collapse.
- Fire – May cause spalling of concrete cover on all elements.
- High Energy Impact – Damage limited to area of impact. Could leave damaged members of questionable strength.
- Wind – Unlikely to be damaged by wind. Exterior skin and curtain walls could be damaged/destroyed.
- Struct Overload/Defect –Construction falsework failures most common. Members break into pieces w/poor integrity.

CHECK POINTS

- Beam/column connections above and below floors.
- Badly confined concrete in columns (empty basket).
- Diag. shear cracks in beams and cracking in slabs near cols.
- Attachment of URM walls and other heavy objects.
- Cracks in concrete shear walls and stairs.

HAZARD REDUCTION

- Shore/avoid badly cracked slabs, beams and/or column.
- Shore/avoid overloaded slabs due to punching shear.
- Remove/shore unstable wall and floor elements.
- Monitor changes in racked/leaning structures.

VICTIM ACCESS

- Vertical access through existing access shafts.
- Vertical access by cutting through slabs from above victims.
- Horizontal entry through existing cavities and openings.
- Cut non-bearing/infill walls after careful assessment.
- Remove large pieces by crane, after rebar has been cut.

.

1-11

1

HEAVY STEEL FRAME BUILDING - HAZARDS

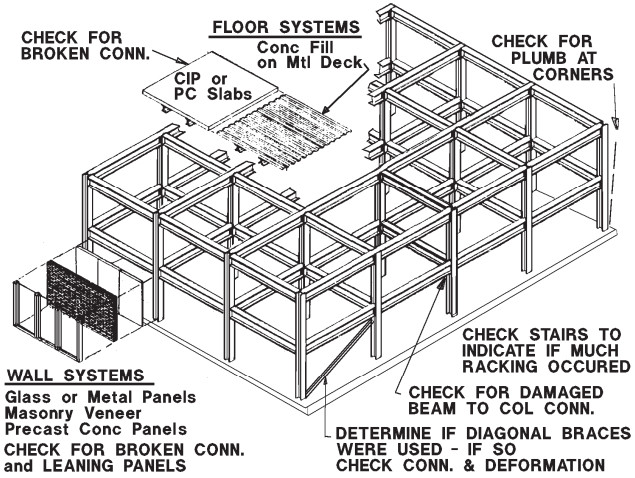

SINCE MOST MEMBERS AND CONNECTIONS ARE HIDDEN, BEST INDICATION OF FAILURE IS EXCESS MOVEMENT CAUSING DAMAGE TO NON-STRUCTURAL ELEMENTS AND OUT OF PLUMB CONDITIONS 02/08 HAS-HSR

CHARACTERISTICS

- Heavy "W" steel beam & column framing – 2 to many stories.
- Office and Commercial Occupancies, some industrial.

KEY PERFORMANCE ASPECTS

- Normally well engineered, but performance is dependent on ductility of connections. PC floor systems as suspect.
- Welded connections may be subject to brittle failure.
- Diagonally braced frames may have buckled cols or braces.

TYPICAL FAILURE MODES

- Connection failure leading to partial collapse. Total collapse is extremely rare.

COMMON COMBINATIONS

- May have masonry, precast or metal panel exterior walls.
- CIP floors over metal deck, or PC/CIP directly on steel.

US&R SHORING OPERATIONS GUIDE
DISASTER SITE REFERENCE DATA

HEAVY STEEL FRAME BUILDING - HAZARDS

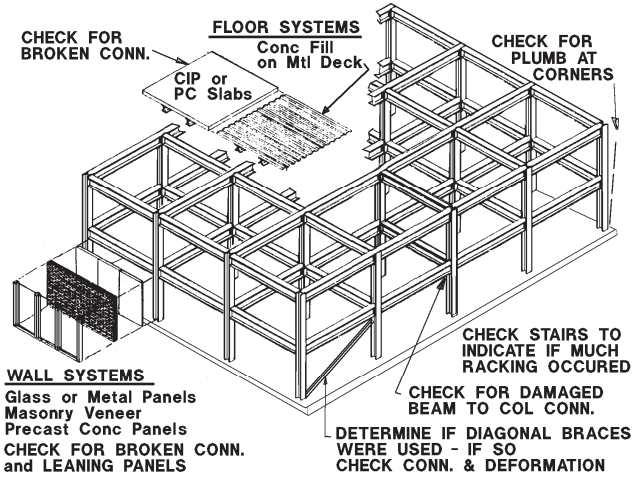

SINCE MOST MEMBERS AND CONNECTIONS ARE HIDDEN, BEST INDICATION OF FAILURE IS EXCESS MOVEMENT CAUSING DAMAGE TO NON-STRUCTURAL ELEMENTS AND OUT OF PLUMB CONDITIONS 02/08 HAS-HSR

CHARACTERISTICS
- Heavy "W" steel beam & column framing – 2 to many stories.
- Office and Commercial Occupancies, some industrial.

KEY PERFORMANCE ASPECTS
- Normally well engineered, but performance is dependent on ductility of connections. PC floor systems as suspect.
- Welded connections may be subject to brittle failure.
- Diagonally braced frames may have buckled cols or braces.

TYPICAL FAILURE MODES
- Connection failure leading to partial collapse. Total collapse is extremely rare.

COMMON COMBINATIONS
- May have masonry, precast or metal panel exterior walls.
- CIP floors over metal deck, or PC/CIP directly on steel.

1-12

HEAVY STEEL FRAME (continued)

EXPECTED PERFORMANCE – for the following:

- **Progressive Collapse** – Rare, since members maintain integrity even with damaged/failed joints.
- **E. Quake** - Good performance of frame - Failure of diagonal bracing and fracture of welded joints have occurred. Facing, especially PC panels could fall and are danger in Aftershocks.
- **Explosion** – Good performance of frame but wall & floor panels could be dislodged. Frame collapse is unlikely.
- **Fire** – Plastic deformation of floors and some joint failure. Strength is regained upon cooling. Collapse very rare.
- **High Energy Impact** – Impacted members are severed/destroyed. Connection failures near impact only.
- **Wind** – Frame at low risk – Skin, especially glass may be destroyed leading to interior partition failure.
- **Struct Overload/Defect** – Failures during erection and long-span failures are most common. Members maintain integrity with failures at joints.

CHECK POINTS

- Indications of movement – plumb corners, stair and non-structural damage – as clues to potential structure damage.
- Main beam to column connections – remove finishes as required.
- Broken PC floor and miscellaneous beam bolt connections.

HAZARD REDUCTION

- Shore beams near damaged or broken connections.
- Remove/avoid/tieback damaged exterior facing.
- Monitor changes in racked/leaning structures.

VICTIM ACCESS

- Vertical access by cutting through slabs from above victims.
- Horizontal entry through existing cavities & openings.
- Remove or shore hazards near victims, if required.

US&R SHORING OPERATIONS GUIDE
DISASTER SITE REFERENCE DATA

HEAVY STEEL FRAME (continued)

1

EXPECTED PERFORMANCE – for the following:

- Progressive Collapse – Rare, since members maintain integrity even with damaged/failed joints.
- E. Quake - Good performance of frame - Failure of diagonal bracing and fracture of welded joints have occurred. Facing, especially PC panels could fall and are danger in Aftershocks.
- Explosion – Good performance of frame but wall & floor panels could be dislodged. Frame collapse is unlikely.
- Fire – Plastic deformation of floors and some joint failure. Strength is regained upon cooling. Collapse very rare.
- High Energy Impact – Impacted members are severed/destroyed. Connection failures near impact only.
- Wind – Frame at low risk – Skin, especially glass may be destroyed leading to interior partition failure.
- Struct Overload/Defect – Failures during erection and long-span failures are most common. Members maintain integrity with failures at joints.

CHECK POINTS

- Indications of movement – plumb corners, stair and non-structural damage – as clues to potential structure damage.
- Main beam to column connections – remove finishes as required.
- Broken PC floor and miscellaneous beam bolt connections.

HAZARD REDUCTION

- Shore beams near damaged or broken connections.
- Remove/avoid/tieback damaged exterior facing.
- Monitor changes in racked/leaning structures.

VICTIM ACCESS

- Vertical access by cutting through slabs from above victims.
- Horizontal entry through existing cavities & openings.
- Remove or shore hazards near victims, if required.

1-13

LIGHT METAL BUILDING – HAZARDS

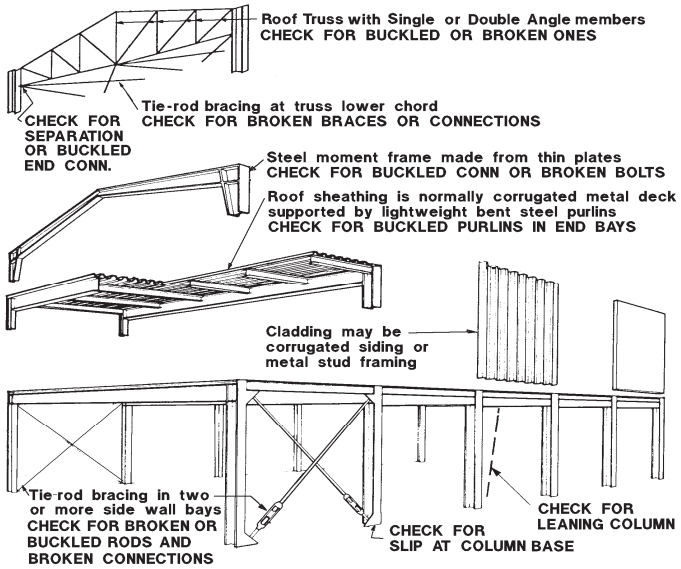

CHARACTERISTICS

- Light-gage steel, pre-fab metal buildings – up to 3 stories.
- Industrial and Commercial Occupancies – most 1 story.

KEY PERFORMANCE ASPECTS

- Highly engineered with little redundancy or over-strength.
- Very flexible, especially in lateral direction.

TYPICAL FAILURE MODES

- Weakest Link Behavior – loss of sheathing allows buckling, leading to collapse of supporting structure.
- Diagonal rod bracing elongation & joint failure.

COMMON COMBINATIONS

- May have masonry, precast or tilt-up exterior walls.
- May have wood or metal interior partitions and mezzanine.

US&R SHORING OPERATIONS GUIDE
DISASTER SITE REFERENCE DATA

LIGHT METAL BUILDING – HAZARDS

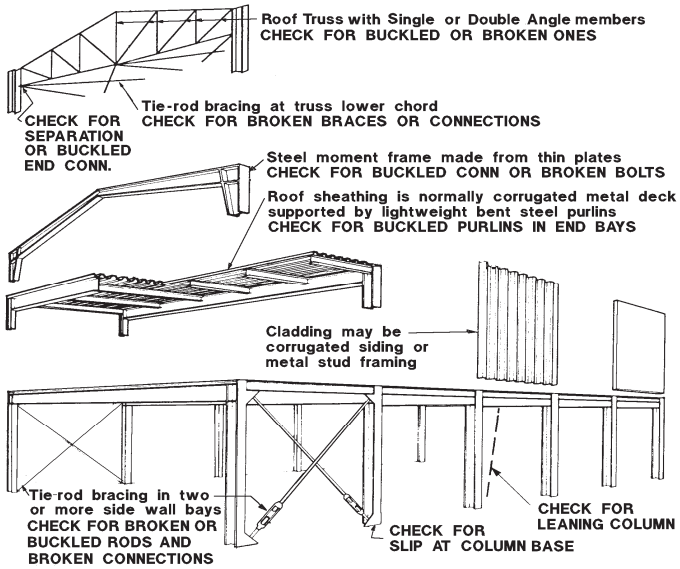

CHARACTERISTICS

- Light-gage steel, pre-fab metal buildings – up to 3 stories.
- Industrial and Commercial Occupancies – most 1 story.

KEY PERFORMANCE ASPECTS

- Highly engineered with little redundancy or over-strength.
- Very flexible, especially in lateral direction.

TYPICAL FAILURE MODES

- Weakest Link Behavior – loss of sheathing allows buckling, leading to collapse of supporting structure.
- Diagonal rod bracing elongation & joint failure.

COMMON COMBINATIONS

- May have masonry, precast or tilt-up exterior walls.
- May have wood or metal interior partitions and mezzanine.

1-14

LIGHT METAL BLDGS (continued)

EXPECTED PERFORMANCE – for the following:

- **Progressive Collapse** – Joint failure and member buckling could lead to part or complete collapse.
- **E. Quake** – Good performance – Failure of rod bracing is common, but collapse is rare. Minor aftershock response.
- **Explosion** – Skin blown away, possibly leading to frame/roof collapse. Entire building blown away in some cases.
- **Fire** – Rapid loss of strength and collapse due to heating. Long span structure could suddenly collapse.
- **High Energy Impact** – Little resistance to impact. Damage may involve several bays of structure.
- **Wind** – At high risk – as skin is blown away, frames/trusses can buckle and collapse. Frames can rack and collapse.
- **Struct Overload/Defect** – Lateral torsion buckling of built-up members. Joint failure and member buckling, leading to part or complete collapse.

CHECK POINTS

- Broken, elongated and/or buckled rod bracing & connections.
- Buckled purlins, truss members, and steel frames.
- Broken and/or elongated bolt connections + anchor bolts.

HAZARD REDUCTION

- Shore and/or diagonally brace racked building frames.
- Remove loose or lightly connected members and sheathing.
- Monitor changes in racked/leaning structures.

VICTIM ACCESS

- Vertical/Horizontal access by removal or cutting sheathing.
- Horizontal entry through existing cavities and openings.
- Remove or shore hazards near victims, if required.

US&R SHORING OPERATIONS GUIDE
DISASTER SITE REFERENCE DATA

LIGHT METAL BLDGS (continued)

1

EXPECTED PERFORMANCE – for the following:

- Progressive Collapse – Joint failure and member buckling could lead to part or complete collapse.
- E. Quake – Good performance – Failure of rod bracing is common, but collapse is rare. Minor aftershock response.
- Explosion – Skin blown away, possibly leading to frame/roof collapse. Entire building blown away in some cases.
- Fire – Rapid loss of strength and collapse due to heating. Long span structure could suddenly collapse.
- High Energy Impact – Little resistance to impact. Damage may involve several bays of structure.
- Wind – At high risk – as skin is blown away, frames/trusses can buckle and collapse. Frames can rack and collapse.
- Struct Overload/Defect – Lateral torsion buckling of built-up members. Joint failure and member buckling, leading to part or complete collapse.

CHECK POINTS

- Broken, elongated and/or buckled rod bracing & connections.
- Buckled purlins, truss members, and steel frames.
- Broken and/or elongated bolt connections + anchor bolts.

HAZARD REDUCTION

- Shore and/or diagonally brace racked building frames.
- Remove loose or lightly connected members and sheathing.
- Monitor changes in racked/leaning structures.

VICTIM ACCESS

- Vertical/Horizontal access by removal or cutting sheathing.
- Horizontal entry through existing cavities and openings.
- Remove or shore hazards near victims, if required.

1-15

COMMUNICATIONS PROCEDURES

Effective communication is vital to the safe and successful operations of personnel assigned to a mission in the urban disaster environment. This is extremely important for clear, concise communications between the separate entities, or between personnel within those entities, that will be involved in a major response to an urban disaster. This would include emergency response and command personnel from the effected and adjacent jurisdictions, DOD personnel, state and federal officials and the various US&R task forces deployed to the disaster.

The following procedures are identified to promote this standardization for the Structures Specialist:

Phonetic Alphabet
Voice Communications Procedures
On-Site Emergency Signaling Procedures

PHONETIC ALPHABET

A - alpha (Al fah)	N - november (no VEM ber)
B - bravo (BRAH voh)	O - oscar (OSS car)
C - charlie (CHAR lee)	P - papa (pah PAH)
D - delta (DELL tah)	Q - quebec (keh BECK)
E - echo (ECK oh)	R - romeo (ROW me oh)
F - foxtrot (FOKS trot)	S - sierra (SEE air rah)
G - golf (GOLF)	T - tango (TANG go)
H - hotel (HOH tell)	U - uniform (YOU nee form)
I - india (IN dee ah)	V - victor (VIK tah)
J - juliet (JEW lee ett)	W - whiskey (WISS key)
K - kilo (KEY low)	X - x-ray (ECKS ray)
L - lima (LEE mah)	Y - yankee (YANG key)
M - mike (MIKE)	Z - zulu (ZOO loo)

US&R SHORING OPERATIONS GUIDE
DISASTER SITE REFERENCE DATA

COMMUNICATIONS PROCEDURES

Effective communication is vital to the safe and successful operations of personnel assigned to a mission in the urban disaster environment. This is extremely important for clear, concise communications between the separate entities, or between personnel within those entities, that will be involved in a major response to an urban disaster. This would include emergency response and command personnel from the effected and adjacent jurisdictions, DOD personnel, state and federal officials and the various US&R task forces deployed to the disaster.

The following procedures are identified to promote this standardization for the Structures Specialist:

Phonetic Alphabet
Voice Communications Procedures
On-Site Emergency Signaling Procedures

PHONETIC ALPHABET

A - alpha (Al fah)	N - november (no VEM ber)
B - bravo (BRAH voh)	O - oscar (OSS car)
C - charlie (CHAR lee)	P - papa (pah PAH)
D - delta (DELL tah)	Q - quebec (keh BECK)
E - echo (ECK oh)	R - romeo (ROW me oh)
F - foxtrot (FOKS trot)	S - sierra (SEE air rah)
G - golf (GOLF)	T - tango (TANG go)
H - hotel (HOH tell)	U - uniform (YOU nee form)
I - india (IN dee ah)	V - victor (VIK tah)
J - juliet (JEW lee ett)	W - whiskey (WISS key)
K - kilo (KEY low)	X - x-ray (ECKS ray)
L - lima (LEE mah)	Y - yankee (YANG key)
M - mike (MIKE)	Z - zulu (ZOO loo)

1-16

COMMUNICATIONS PROCEDURES (continued)

VOICE COMMUNICATIONS PROCEDURES

What To Do	Why To Do It
1. **LISTEN**	A. To make sure your transmission won't interfere with another communication. B. To be aware of other things going on.
2. **THINK** about what you will say before you transmit.	A. To communicate your idea effectively. B. To use only the air time needed.
3. **MAKE THE CALL.** Give: a. the call sign or identification of the station called. b. the words "THIS IS" c. the call sign or identification of the calling station.	A. To be clear. B. To be understood reliably on the first call. C. To use a procedure that is universally accepted.
4. **COMMUNICATE.** Speak clearly. Plain English/no codes. Repeat back critical items for confirmation.	A. To be understood. B. To be fast. C. To avoid confusion. D. To be accurate.
5. **USE PHONETICS** for: a. call signs. b. station identification. c. spelling words and names that are not easily understood	A. To be clear. B. To be accurate. C. To be fast. D. To use a procedure that is universally accepted.

US&R SHORING OPERATIONS GUIDE
DISASTER SITE REFERENCE DATA

COMMUNICATIONS PROCEDURES (continued)

VOICE COMMUNICATIONS PROCEDURES

1

What To Do	Why To Do It
1. **LISTEN**	A. To make sure your transmission won't interfere with another communication. B. To be aware of other things going on.
2. **THINK** about what you will say before you transmit.	A. To communicate your idea effectively. B. To use only the air time needed.
3. **MAKE THE CALL.** Give: a. the call sign or identification of the station called. b. the words "THIS IS" c. the call sign or identification of the calling station.	A. To be clear. B. To be understood reliably on the first call. C. To use a procedure that is universally accepted.
4. **COMMUNICATE.** Speak clearly. Plain English/no codes. Repeat back critical items for confirmation.	A. To be understood. B. To be fast. C. To avoid confusion. D. To be accurate.
5. **USE PHONETICS** for: a. call signs. b. station identification. c. spelling words and names that are not easily understood	A. To be clear. B. To be accurate. C. To be fast. D. To use a procedure that is universally accepted.

1-17

ON-SITE EMERGENCY SIGNALING PROCEDURES

Effective emergency signaling procedures are essential for the safe operation of rescue personnel operating at a disaster site. These signals must be clear and universally understood by all personnel involved in the operation. Air horns or other appropriate hailing devices shall be used to sound the appropriate signals as follows:

Cease Operation/All Quiet	**1 long blast (3 seconds) (QUIET)**
Evacuate the Area	**3 short blasts (1 second each) (OUT, OUT, OUT)**
Resume Operations	**1 long and 1 short (O - KAY)**

FEMA BUILDING MARKING SYSTEM

GENERAL:
A uniform building marking system has been developed by the FEMA National US&R Response System.

There are 4 categories of FEMA US&R Markings:

- Structure Identification Marking
- Structure/Hazards Evaluation Marking
- Victim Location Marking
- Search Assessment Marking

The building marking system was established to ensure:

- Differentiation of structures within a geographic area.
- Communicate the condition and status of US&R operations within the structure.

Identification markings on structures may be made with International Orange spray paint (or crayon), placed on the building surface. In cases where many structures are involved or spray painting needs to be avoided, a system using a "Stick-on" Label should be used.

Markings should be placed on normal address side of the structure.

US&R SHORING OPERATIONS GUIDE
DISASTER SITE REFERENCE DATA

ON-SITE EMERGENCY SIGNALING PROCEDURES

Effective emergency signaling procedures are essential for the safe operation of rescue personnel operating at a disaster site. These signals must be clear and universally understood by all personnel involved in the operation. Air horns or other appropriate hailing devices shall be used to sound the appropriate signals as follows:

Cease Operation/All Quiet	**1 long blast (3 seconds) (QUIET)**
Evacuate the Area	**3 short blasts (1 second each) (OUT, OUT, OUT)**
Resume Operations	**1 long and 1 short (O - KAY)**

FEMA BUILDING MARKING SYSTEM

GENERAL:
A uniform building marking system has been developed by the FEMA National US&R Response System.

There are 4 categories of FEMA US&R Markings:

Structure Identification Marking
Structure/Hazards Evaluation Marking
Victim Location Marking
Search Assessment Marking

The building marking system was established to ensure:

Differentiation of structures within a geographic area.
Communicate the condition and status of US&R operations within the structure.

Identification markings on structures may be made with International Orange spray paint (or crayon), placed on the building surface. In cases where many structures are involved or spray painting needs to be avoided, a system using a "Stick-on" Label should be used.

Markings should be placed on normal address side of the structure.

1-18

FEMA BUILDING MARKING SYS (continued)

STRUCTURE IDENTIFICATION MARKING

If at all possible, the existing street name and building number will be used. If some numbers have been obliterated, attempt should be made to reestablish the numbering based on nearby structures.

If no numbers are identifiable on a given block, then US&R personnel will assign and identify the street name and numbers based on other structures in the proximity. The structures shall then be numbered to differentiate them (using paint or crayon).

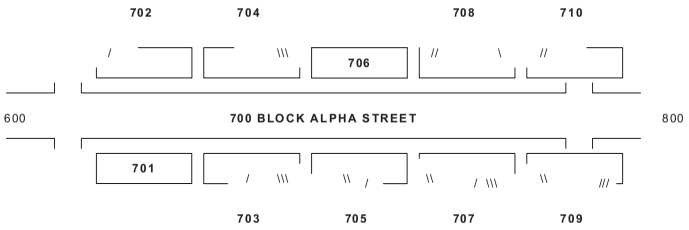

CASE 1 – IF SOME NUMBERS ARE KNOWN, FILL IN BETWEEN

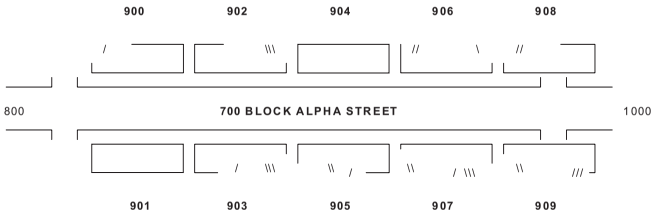

CASE 2 – IF NO NUMBERS ARE KNOWN, FILL IN USE SMALL NUMBERS

US&R SHORING OPERATIONS GUIDE
DISASTER SITE REFERENCE DATA

FEMA BUILDING MARKING SYS (continued)

STRUCTURE IDENTIFICATION MARKING

1

If at all possible, the existing street name and building number will be used. If some numbers have been obliterated, attempt should be made to reestablish the numbering based on nearby structures.

If no numbers are identifiable on a given block, then US&R personnel will assign and identify the street name and numbers based on other structures in the proximity. The structures shall then be numbered to differentiate them (using paint or crayon).

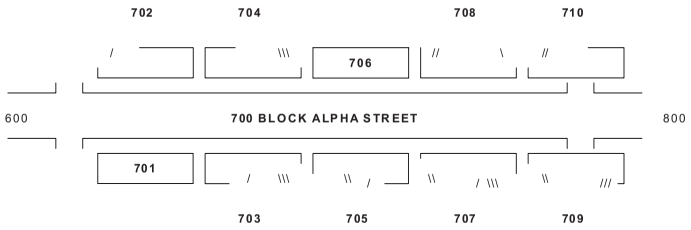

CASE 1 – IF SOME NUMBERS ARE KNOWN, FILL IN BETWEEN

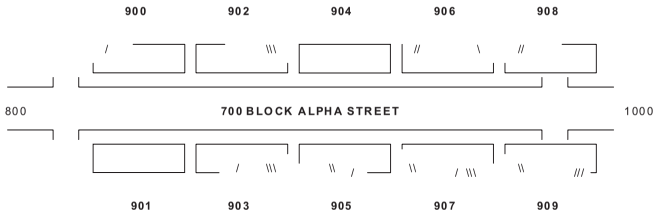

CASE 2 – IF NO NUMBERS ARE KNOWN, FILL IN USE SMALL NUMBERS

1-19

FEMA BUILDING MARKING SYS (continued)

STRUCTURE I.D. MARKING (continued)

It is also important to identify locations within a single structure. The address side of the structure shall be defined as SIDE A. Other sides of the structure shall be assigned alphabetically in a clockwise manner from SIDE A.

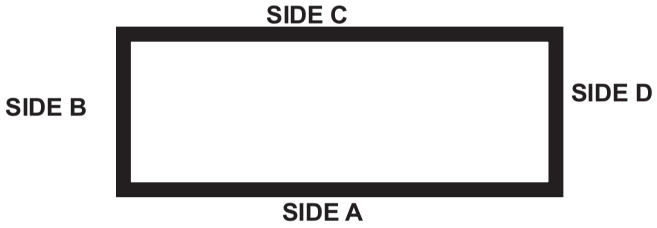

The interior of the structure will be divided into QUADRANTS. The quadrants shall be identified ALPHABETICALLY in a clockwise manner starting from where the SIDE A and SIDE B perimeter meet. The center core, where all four quadrants meet will be identified as Quadrant E (i.e., central core lobby, etc.).

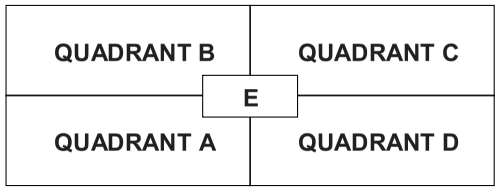

US&R SHORING OPERATIONS GUIDE
DISASTER SITE REFERENCE DATA

FEMA BUILDING MARKING SYS (continued)

STRUCTURE I.D. MARKING (continued)

It is also important to identify locations within a single structure. The address side of the structure shall be defined as SIDE A. Other sides of the structure shall be assigned alphabetically in a clockwise manner from SIDE A.

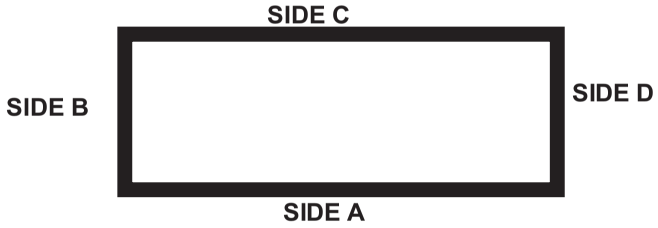

The interior of the structure will be divided into QUADRANTS. The quadrants shall be identified ALPHABETICALLY in a clockwise manner starting from where the SIDE A and SIDE B perimeter meet. The center core, where all four quadrants meet will be identified as Quadrant E (i.e., central core lobby, etc.).

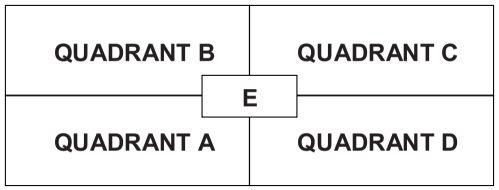

700 BLOCK ALPHA STREET

1-20

FEMA BUILDING MARKING SYS (continued)

STRUCTURE I.D. MARKING (continued)

Multi-story buildings must have each floor clearly identified. If not clearly discernable, the floors should be numbered as referenced from the exterior. The Grade (or Street) Level Floor would be designated Floor 1 and, moving upward the Second Floor would be Floor 2, etc. Conversely, the First Floor below Grade (or Street) level would be B-1, the Second B-2, etc. For buildings where the street slopes, all at the incident must be informed as to which level will be called the First Floor

If a structure contains a grid of structural columns, they should be marked with 2' high, orange letters/numbers to further identify enclosed areas. If plans are available, use the existing numbering system. If plans are not available, **Letter** the columns across the **Long Side** (Side A in this Example) starting from the left, and **Number** the columns along the **Short Side** (Side B in this example) starting from the front, Side A. The story level should be added to each marked Column, and be placed below the Column Locator Mark. Example: "FL-2" = Floor 2.

Column Grid Layout

- **Use existing column grid - If Known**

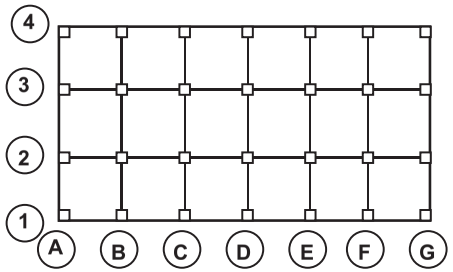

700 Block Alpha Street

US&R SHORING OPERATIONS GUIDE
DISASTER SITE REFERENCE DATA

FEMA BUILDING MARKING SYS (continued)

STRUCTURE I.D. MARKING (continued)

1

Multi-story buildings must have each floor clearly identified. If not clearly discernable, the floors should be numbered as referenced from the exterior. The Grade (or Street) Level Floor would be designated Floor 1 and, moving upward the Second Floor would be Floor 2, etc. Conversely, the First Floor below Grade (or Street) level would be B-1, the Second B-2, etc. For buildings where the street slopes, all at the incident must be informed as to which level will be called the First Floor

If a structure contains a grid of structural columns, they should be marked with 2' high, orange letters/numbers to further identify enclosed areas. If plans are available, use the existing numbering system. If plans are not available, **Letter** the columns across the **Long Side** (Side A in this Example) starting from the left, and **Number** the columns along the **Short Side** (Side B in this example) starting from the front, Side A. The story level should be added to each marked Column, and be placed below the Column Locator Mark. Example: "FL-2" = Floor 2.

Column Grid Layout

- Use existing column grid - If Known

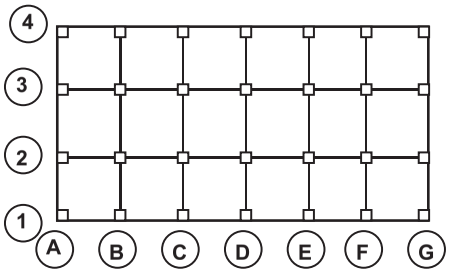

700 Block Alpha Street

1-21

FEMA BUILDING MARKING SYS (continued)

STRUCTURE/HAZARDS EVALUATION MARKING

- The Structures Spec (or other appropriate TF member) will outline a 2' X 2' square box at any entrance accessible for entry into any compromised structure. Paint sticks, lumber crayons or aerosol spray-paint cans (International Orange color) will be used for this marking system. Peel & Stick labels or stiff paper placards may be used to avoid paint damage. (See example on Page 1-25.)
- Materials and methods used for marking shall be coordinated with FEMA IST as well as local Authority Having Jurisdiction, in order to avoid confusion with search and other marking.
- It is important that an effort is made to mark all normal entry points (Side A if possible) to a building under evaluation to ensure that Task Force personnel approaching the building can identify that it has been evaluated.
- The specific markings will be made inside the box to indicate the condition of the structure **at the time of the assessment.** Any identified hazards will be indicated, outside of the box, on the right side. (Placards have space below the box for comments on hazards)
- Normally the marking (or placards) would, also, be made immediately adjacent to the entry point identified as lowest risk. An arrow will be placed next to the box indicating the direction of the lowest risk entrance if the Structure/Hazards Evaluation Marking must be made somewhat remote from this entrance.
- All Task Force personnel must be aware of the possibility of, and look for other Structure/Hazards Evaluation markings made on the interior of the building.
- As each subsequent assessment is performed throughout the course of the mission, a new TIME, DATE, and TASK FORCE ID entry will be made below the previous entry, or a completely new marking made if the original information is now incorrect.

US&R SHORING OPERATIONS GUIDE
DISASTER SITE REFERENCE DATA

FEMA BUILDING MARKING SYS (continued)

STRUCTURE/HAZARDS EVALUATION MARKING

- The Structures Spec (or other appropriate TF member) will outline a 2' X 2' square box at any entrance accessible for entry into any compromised structure. Paint sticks, lumber crayons or aerosol spray-paint cans (International Orange color) will be used for this marking system. Peel & Stick labels or stiff paper placards may be used to avoid paint damage. (See example on Page 1-25.)
- Materials and methods used for marking shall be coordinated with FEMA IST as well as local Authority Having Jurisdiction, in order to avoid confusion with search and other marking.
- It is important that an effort is made to mark all normal entry points (Side A if possible) to a building under evaluation to ensure that Task Force personnel approaching the building can identify that it has been evaluated.
- The specific markings will be made inside the box to indicate the condition of the structure **at the time of the assessment.** Any identified hazards will be indicated, outside of the box, on the right side. (Placards have space below the box for comments on hazards)
- Normally the marking (or placards) would, also, be made immediately adjacent to the entry point identified as lowest risk. An arrow will be placed next to the box indicating the direction of the lowest risk entrance if the Structure/Hazards Evaluation Marking must be made somewhat remote from this entrance.
- All Task Force personnel must be aware of the possibility of, and look for other Structure/Hazards Evaluation markings made on the interior of the building.
- As each subsequent assessment is performed throughout the course of the mission, a new TIME, DATE, and TASK FORCE ID entry will be made below the previous entry, or a completely new marking made if the original information is now incorrect.

1-22

FEMA BUILDING MARKING SYS (continued)

STRUCTURE/HAZARDS EVALUATION MARKING

The depiction of the various markings is as follows:

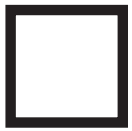

Low Risk for US&R Operations, with low probability of further collapse. Victims could be trapped by contents, or building could be completely pancaked or soft 1st story.

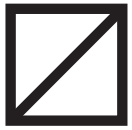

Medium Risk for US&R Ops, and structure is significantly damaged. May need shoring, bracing, removal, and/or monitoring of hazards. The structure may be partly collapsed.

High Risk for US&R Ops, and may be subject to sudden collapse. Remote search operations may proceed at significant risk. If rescue operations are undertaken, significant and time-consuming mitigation should be done.

Arrow located next to a marking box indicates the direction to the lowest risk entrance to the structure, should the marking box need to be made remote from the indicated entrance.

HM

Indicates that a Hazardous Material condition exists in or adjacent to the structure. Personnel may be in jeopardy. Consideration for operations should be made in conjunction with the Hazardous Materials Specialist. Type of hazard may also be noted.

US&R SHORING OPERATIONS GUIDE
DISASTER SITE REFERENCE DATA

FEMA BUILDING MARKING SYS (continued)

STRUCTURE/HAZARDS EVALUATION MARKING

The depiction of the various markings is as follows:

1

Low Risk for US&R Operations, with low probability of further collapse. Victims could be trapped by contents, or building could be completely pancaked or soft 1st story.

Medium Risk for US&R Ops, and structure is significantly damaged. May need shoring, bracing, removal, and/or monitoring of hazards. The structure may be partly collapsed.

High Risk for US&R Ops, and may be subject to sudden collapse. Remote search operations may proceed at significant risk. If rescue operations are undertaken, significant and time-consuming mitigation should be done.

Arrow located next to a marking box indicates the direction to the lowest risk entrance to the structure, should the marking box need to be made remote from the indicated entrance.

HM

Indicates that a Hazardous Material condition exists in or adjacent to the structure. Personnel may be in jeopardy. Consideration for operations should be made in conjunction with the Hazardous Materials Specialist. Type of hazard may also be noted.

1-23

STRUCTURE/HAZARDS EVALUATION MARKING (cont.)

The TIME, DATE, and TF ID, are noted outside the box at the right-hand side. This info is made with paint stick or lumber crayon. The paper (or cardboard), stick-on placards may need to be attached using duct tape to assure their positioning.

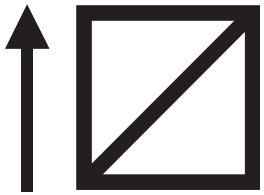

7/15/91 1310 hrs.
HM - natural gas
OR-TF1

This example is for a Medium Risk building, and the arrow indicates the direction to the lowest risk entry (possibly a window, upper floor, etc.). Assessment was made on July 15, 1991, at 1:10 PM. There is an indication of natural gas in the structure. The evaluation was made by the #1 TF from the State of Oregon.

It should be understood that this building would not be entered until the Hazmat (natural gas) had been mitigated. When that mitigation is performed, this mark should be altered by a placing a line thru the HM and adding the time and TF who performed the mitigation. An entirely new mark could also be added when the mitigation is done, or after any change in conditions such as an aftershock. To indicate changed conditions when using labels or placards, one may cross-out the hazard if mitigated or just replace the label/placard if appropriate.

Marking boxes may also be placed in each of the specific areas within the structure (i.e., rooms, hallways, stairwells, etc.) to denote hazardous conditions in separate parts of the building.

It should also be noted that the Structure/Hazards Mark might not be made in many situations, such as:

- Structures when StS are present at all times during the incident.
- Following hurricanes for very simple structures.

US&R SHORING OPERATIONS GUIDE
DISASTER SITE REFERENCE DATA

STRUCTURE/HAZARDS EVALUATION MARKING (cont.)

The TIME, DATE, and TF ID, are noted outside the box at the right-hand side. This info is made with paint stick or lumber crayon. The paper (or cardboard), stick-on placards may need to be attached using duct tape to assure their positioning.

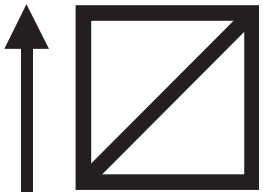

7/15/91 1310 hrs.
HM - natural gas
OR-TF1

This example is for a Medium Risk building, and the arrow indicates the direction to the lowest risk entry (possibly a window, upper floor, etc.). Assessment was made on July 15, 1991, at 1:10 PM. There is an indication of natural gas in the structure. The evaluation was made by the #1 TF from the State of Oregon.

It should be understood that this building would not be entered until the Hazmat (natural gas) had been mitigated. When that mitigation is performed, this mark should be altered by a placing a line thru the HM and adding the time and TF who performed the mitigation. An entirely new mark could also be added when the mitigation is done, or after any change in conditions such as an aftershock. To indicate changed conditions when using labels or placards, one may cross-out the hazard if mitigated or just replace the label/placard if appropriate.

Marking boxes may also be placed in each of the specific areas within the structure (i.e., rooms, hallways, stairwells, etc.) to denote hazardous conditions in separate parts of the building.

It should also be noted that the Structure/Hazards Mark might not be made in many situations, such as:

- Structures when StS are present at all times during the incident.
- Following hurricanes for very simple structures.

1-24

STRUCTURE/HAZARDS EVALUATION MARKING (cont.)

STRUCTURE/HAZARDS PLACARD

Should be printed on adhesive backed, 8.5" x 11" heavy white paper, Rite-on Rain paper, or light cardboard. Cut in half to obtain two placards.

1

White color was selected to avoid being confused with the Green – Yellow – Red Placards that are placed during Safety Evaluation of Structures by non-US&R Engineers.

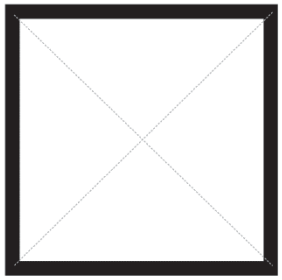

Structural / Hazard Evaluation

DATE	TIME	TF
HAZARDS:		

LR	MR	XR
Low Risk for US&R Ops. Low probability of further collapse. Victims could be trapped by contents, or building could be completely pancaked or soft 1st story	**Medium Risk** for US&R Ops. Structure is significantly damaged. May need shoring, bracing, removal, and/or monitoring of hazards. The structure may be partly collapsed.	**High Risk** for US&R Ops. May be subject to sudden collapse. Remote search operations may proceed at significant risk. If Rescue Ops are undertaken, significant and time-consuming mitigation should be done

Should the marking box need to be made remote from the indicated entrance, place an arrow next to the box to indicate the direction to the lowest risk entrance to structure.

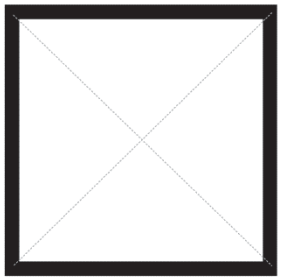

Structural / Hazard Evaluation

DATE	TIME	TF
HAZARDS:		

LR	MR	XR
Low Risk for US&R Ops. Low probability of further collapse. Victims could be trapped by contents, or building could be completely pancaked or soft 1st story	**Medium Risk** for US&R Ops. Structure is significantly damaged. May need shoring, bracing, removal, and/or monitoring of hazards. The structure may be partly collapsed.	**High Risk** for US&R Ops. May be subject to sudden collapse. Remote search operations may proceed at significant risk. If Rescue Ops are undertaken, significant and time-consuming mitigation should be done

Should the marking box need to be made remote from the indicated entrance, place an arrow next to the box to indicate the direction to the lowest risk entrance to structure.

US&R SHORING OPERATIONS GUIDE
DISASTER SITE REFERENCE DATA

STRUCTURE/HAZARDS EVALUATION MARKING (cont.)

STRUCTURE/HAZARDS PLACARD

Should be printed on adhesive backed, 8.5" x 11" heavy white paper, Rite-on Rain paper, or light cardboard. Cut in half to obtain two placards.

1

White color was selected to avoid being confused with the Green – Yellow – Red Placards that are placed during Safety Evaluation of Structures by non-US&R Engineers.

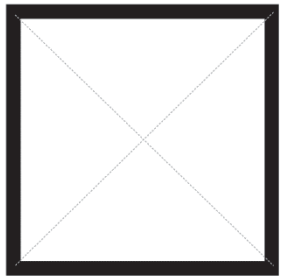

Structural / Hazard Evaluation

DATE	TIME	TF
HAZARDS:		

LR	MR	XR
Low Risk for US&R Ops. Low probability of further collapse. Victims could be trapped by contents, or building could be completely pancaked or soft 1st story	**Medium Risk** for US&R Ops. Structure is significantly damaged. May need shoring, bracing, removal, and/or monitoring of hazards. The structure may be partly collapsed.	**High Risk** for US&R Ops. May be subject to sudden collapse. Remote search operations may proceed at significant risk. If Rescue Ops are undertaken, significant and time-consuming mitigation should be done

Should the marking box need to be made remote from the indicated entrance, place an arrow next to the box to indicate the direction to the lowest risk entrance to structure.

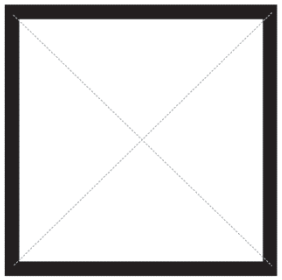

Structural / Hazard Evaluation

DATE	TIME	TF
HAZARDS:		

LR	MR	XR
Low Risk for US&R Ops. Low probability of further collapse. Victims could be trapped by contents, or building could be completely pancaked or soft 1st story	**Medium Risk** for US&R Ops. Structure is significantly damaged. May need shoring, bracing, removal, and/or monitoring of hazards. The structure may be partly collapsed.	**High Risk** for US&R Ops. May be subject to sudden collapse. Remote search operations may proceed at significant risk. If Rescue Ops are undertaken, significant and time-consuming mitigation should be done

Should the marking box need to be made remote from the indicated entrance, place an arrow next to the box to indicate the direction to the lowest risk entrance to structure.

1-25

FEMA BUILDING MARKING SYS (continued)

SEARCH ASSESSMENT MARKING

A separate and distinct marking system is necessary to denote information relating to the victim location determinations in the areas searched. This separate Search Assessment Marking System is designed to be used in conjunction with the Structure and Hazards Evaluation Marking System. The Canine Search Specialists, Technical Search Specialists, and/or Search Team Manager (or any other Task Force member performing the search function) will draw an "X" that is 2' X 2' in size with International Orange paint stick, lumber crayon or color spray paint **(note that K9 may be adversely effected by the Fumes from Spray Paint).** This X will be constructed in two operations - one slash drawn upon entry into the structure (or room, hallway, etc.) and a second crossing slash drawn upon exit.

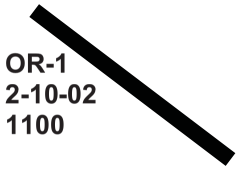

Single slash drawn upon entry to a structure or area indicates search operations are currently in progress. Upon entering a building or a separate wing of a large building, add the Search Team I.D., Date and Time (24hr) of entry. (Next to main entry)

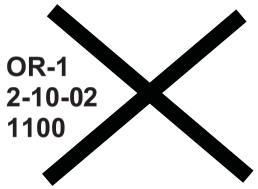

Note: OR-1 is used instead of OR-TF1 to save time. Also 1100 is used to abbreviate 1100hrs

Crossing slash is drawn as personnel exit from the structure or area.

Distinct markings will be made inside the remaining quadrants of the X to clearly denote the search status and findings at the time of this assessment. The marks will be made with carpenter chalk or lumber crayon. The following illustrations define the Search Assessment marks:

US&R SHORING OPERATIONS GUIDE
DISASTER SITE REFERENCE DATA

FEMA BUILDING MARKING SYS (continued)

SEARCH ASSESSMENT MARKING

A separate and distinct marking system is necessary to denote information relating to the victim location determinations in the areas searched. This separate Search Assessment Marking System is designed to be used in conjunction with the Structure and Hazards Evaluation Marking System. The Canine Search Specialists, Technical Search Specialists, and/or Search Team Manager (or any other Task Force member performing the search function) will draw an "X" that is 2' X 2' in size with International Orange paint stick, lumber crayon or color spray paint (note that K9 may be adversely effected by the Fumes from Spray Paint). This X will be constructed in two operations - one slash drawn upon entry into the structure (or room, hallway, etc.) and a second crossing slash drawn upon exit.

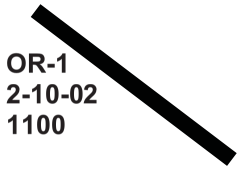

Single slash drawn upon entry to a structure or area indicates search operations are currently in progress. Upon entering a building or a separate wing of a large building, add the Search Team I.D., Date and Time (24hr) of entry. (Next to main entry)

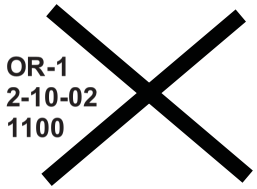

Note: OR-1 is used instead of OR-TF1 to save time. Also 1100 is used to abbreviate 1100hrs

Crossing slash is drawn as personnel exit from the structure or area.

Distinct markings will be made inside the remaining quadrants of the X to clearly denote the search status and findings at the time of this assessment. The marks will be made with carpenter chalk or lumber crayon. The following illustrations define the Search Assessment marks:

1-26

SEARCH ASSESSMENT MARKING (continued)

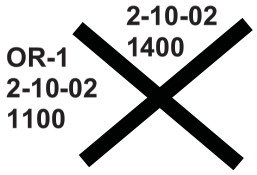

AFTER EXITING & DRAWING the 2nd SLASH, add the following INFO:

TOP QUADRANT - Time and date that the Search Team personnel left the structure.

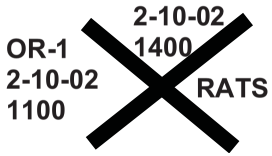

RIGHT QUADRANT - Personal hazards.

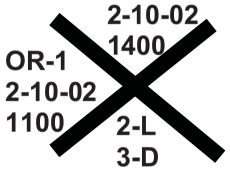

BOTTOM QUADRANT - Number of live and dead victims still inside the structure. ["0" = no victims]

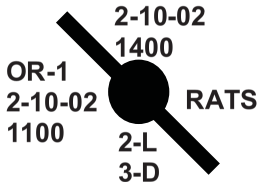

When the Recon Team leaves a structure **WITHOUT** completing the Search (aftershock, end of shift, etc), then the second slash **WILL NOT** be made. A **Solid Circle** is drawn at the mid-length of the First Slash, and Date/Time of Exit, Personal Hazards, & Victim Info will be filled in. Also indication of Quadrants or Floors completed should be added in a **BOX** below the X, or if the Bldg **HAS NOT** been entered (as in Hurricanes) mark **No Entry** in the **BOX.**

F = Floors
Q = Quadrants
or
No Entry

US&R SHORING OPERATIONS GUIDE
DISASTER SITE REFERENCE DATA

SEARCH ASSESSMENT MARKING (continued)

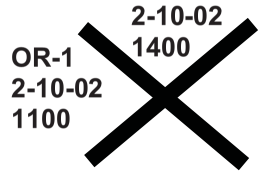

AFTER EXITING & DRAWING the 2nd SLASH, add the following INFO:

TOP QUADRANT - Time and date that the Search Team personnel left the structure.

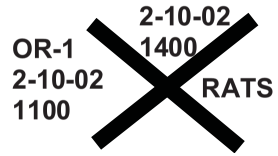

RIGHT QUADRANT - Personal hazards.

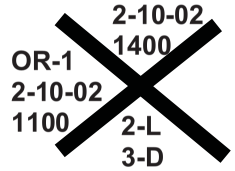

BOTTOM QUADRANT - Number of live and dead victims still inside the structure. ["0" = no victims]

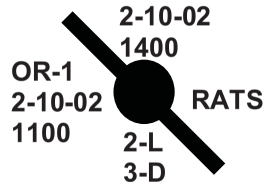

When the Recon Team leaves a structure **WITHOUT** completing the Search (aftershock, end of shift, etc), then the second slash **WILL NOT** be made. A **Solid Circle** is drawn at the mid-length of the First Slash, and Date/Time of Exit, Personal Hazards, & Victim Info will be filled in. Also indication of Quadrants or Floors completed should be added in a **BOX** below the X, or if the Bldg **HAS NOT** been entered (as in Hurricanes) mark **No Entry** in the **BOX.**

F = Floors
Q = Quadrants
or
No Entry

1-27

FEMA BUILDING MARKING SYS (continued)

SEARCH ASSESSMENT MARKING (continued)

In most cases, extemporaneous information will not be conveyed using the marking system. This type of communication will usually take place as a result of face-to-face meetings between Search, Rescue, and other components of the Task Force.

Search Markings should be made at each area within a structure, such as rooms, voids, etc, but only information related to the results of the search will be marked upon exiting each space (No Time or TF designation).

- An adhesive-backed Search Mark Placard has been approved for use in incidents like hurricanes and large earthquakes where many structures are involved. All FEMA Task Forces have been supplied with the graphic to be used in creating the stick-on search marks, which should be printed on orange paper. (See example on Page 1-30.)

VICTIM LOCATION MARKING SYSTEM

- During the search function it is necessary to identify the location of potential and known victims.
- The amount and type of debris in the area may completely cover or obstruct the location of any victim.
- The victim location marks are made by the search team or others aiding the search and rescue operations whenever a known or potential victim is located and not immediately removed.
- The victim location marking symbols should be made with orange spray paint (using line marking or "downward" spray can) or orange crayon.
- The following illustrates the marking system:

US&R SHORING OPERATIONS GUIDE
DISASTER SITE REFERENCE DATA

FEMA BUILDING MARKING SYS (continued)

SEARCH ASSESSMENT MARKING (continued)

In most cases, extemporaneous information will not be conveyed using the marking system. This type of communication will usually take place as a result of face-to-face meetings between Search, Rescue, and other components of the Task Force.

Search Markings should be made at each area within a structure, such as rooms, voids, etc, but only information related to the results of the search will be marked upon exiting each space (No Time or TF designation).

- An adhesive-backed Search Mark Placard has been approved for use in incidents like hurricanes and large earthquakes where many structures are involved. All FEMA Task Forces have been supplied with the graphic to be used in creating the stick-on search marks, which should be printed on orange paper. (See example on Page 1-30.)

VICTIM LOCATION MARKING SYSTEM

- During the search function it is necessary to identify the location of potential and known victims.
- The amount and type of debris in the area may completely cover or obstruct the location of any victim.
- The victim location marks are made by the search team or others aiding the search and rescue operations whenever a known or potential victim is located and not immediately removed.
- The victim location marking symbols should be made with orange spray paint (using line marking or "downward" spray can) or orange crayon.
- The following illustrates the marking system:

1-28

VICTIM LOCATION MARKING SYSTEM (cont.)

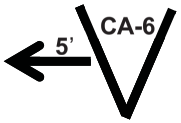

Make a large (2' x 2') "V" w/orange paint near the location of the known or **potential** victim. Mark the name of the search team as shown. An arrow may need to be painted next to "V" pointing towards the victims location is not immediately near where the "V" is painted. Show distance on arrow.

Paint a circle around the "V" when a potential victim has been **Confirmed to be alive** either visually, vocally, or by hearing sounds that would indicate a high probability of a victim. If more than one confirmed live victim, mark total number under the "V".

Paint a horizontal line through the middle of the "V" when a **Confirmed** victim is determined to be **deceased**. If more than one confirmed deceased victim, mark the total number under the "V". Use both live and deceased victim marking symbols when a combination of live and deceased victims are determined to be in the same location.

Paint an "X" through the **Confirmed** victim symbol after **all victims** have been removed from the specific location identified by the marking.

- Paint new victim symbols next to additional victims that are later located near where the original victim(s) were removed. (assuming original symbol has been "X"ed out).

US&R SHORING OPERATIONS GUIDE
DISASTER SITE REFERENCE DATA

VICTIM LOCATION MARKING SYSTEM (cont.)

1

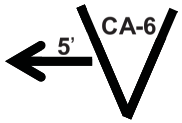

Make a large (2' x 2') "V" w/orange paint near the location of the known or **potential** victim. Mark the name of the search team as shown. An arrow may need to be painted next to "V" pointing towards the victims location is not immediately near where the "V" is painted. Show distance on arrow.

Paint a circle around the "V" when a potential victim has been **Confirmed to be alive** either visually, vocally, or by hearing sounds that would indicate a high probability of a victim. If more than one confirmed live victim, mark total number under the "V".

Paint a horizontal line through the middle of the "V" when a **Confirmed** victim is determined to be **deceased**. If more than one confirmed deceased victim, mark the total number under the "V". Use both live and deceased victim marking symbols when a combination of live and deceased victims are determined to be in the same location.

Paint an "X" through the **Confirmed** victim symbol after **all victims** have been removed from the specific location identified by the marking.

- Paint new victim symbols next to additional victims that are later located near where the original victim(s) were removed. (assuming original symbol has been "X"ed out).

1-29

BUILDING MARKING SYS (continued)

Search Assessment Placard

Should be printed on adhesive backed, bright orange, 8.5" x 11" heavy paper, Rite-on Rain paper, or light cardboard. Cut in half to obtain two placards.

Orange color was selected to avoid being confused with the Green – Yellow – Red Placards that are placed during Safety Evaluation of Structures by non-US&R Engineers.

Note that the Type of Search (Primary, No Entry, & Secondary) may be circled in the Additional Information Box below the mark.

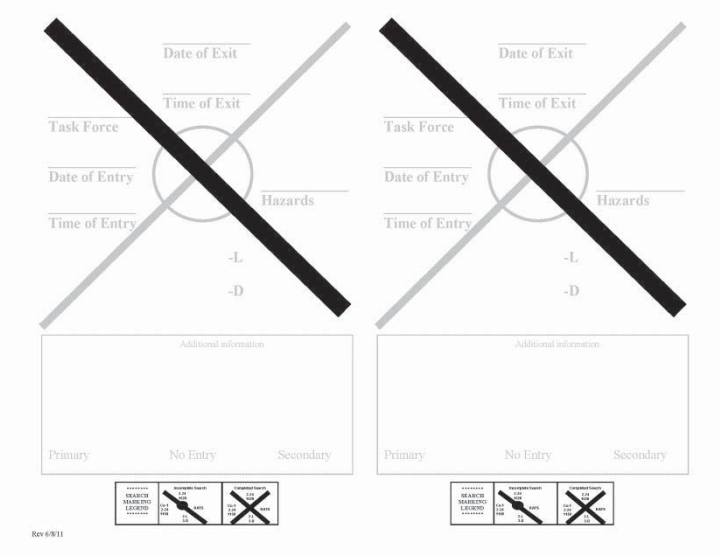

US&R SHORING OPERATIONS GUIDE
DISASTER SITE REFERENCE DATA

BUILDING MARKING SYS (continued)

Search Assessment Placard

Should be printed on adhesive backed, bright orange, 8.5" x 11" heavy paper, Rite-on Rain paper, or light cardboard. Cut in half to obtain two placards.

Orange color was selected to avoid being confused with the Green – Yellow – Red Placards that are placed during Safety Evaluation of Structures by non-US&R Engineers.

Note that the Type of Search (Primary, No Entry, & Secondary) may be circled in the Additional Information Box below the mark.

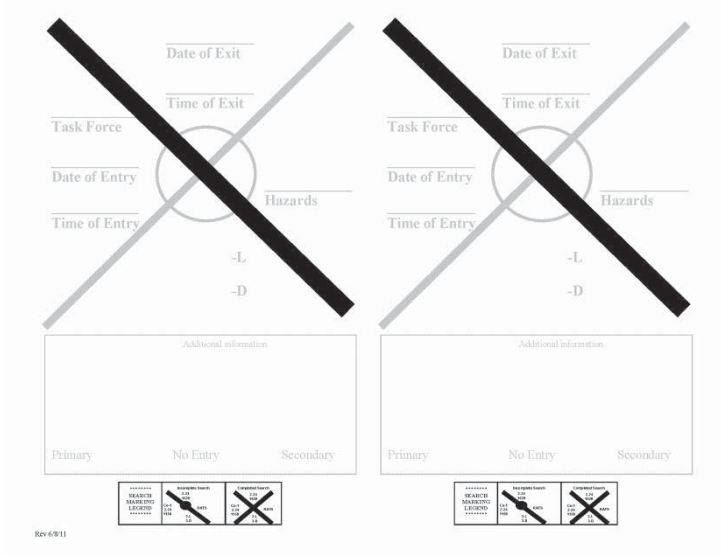

FEMA US&R SHORING SYMBOLS

These symbols were developed by the FEMA US&R Structures Sub-group, and should be used to map locations of US&R Shoring.

1

- Tee Shore — **T**
- Double T Shore — **DT**
- Vertical Shore (V-3 = 3 posts, V-2 = 2 posts) — **V-3**
- Laced Post Shore
  (at Plywood Laced Post use PLP in box) — **LP**
- Cribbing — **C**
- Raker Shore
  - Place vertical side of triangle against wall
  - Each triangle represents one Raker
  - Rakers should be installed groups of two or larger — **R**
- Horizontal Shore
  (H - 3 = 3 struts, H - 2 = 2 struts) — **H-3**
- Window or Door Shore (W or D) — **W or D**

US&R SHORING OPERATIONS GUIDE
DISASTER SITE REFERENCE DATA

FEMA US&R SHORING SYMBOLS

These symbols were developed by the FEMA US&R Structures Sub-group, and should be used to map locations of US&R Shoring.

1

- Tee Shore — T
- Double T Shore — DT
- Vertical Shore (V-3 = 3 posts, V-2 = 2 posts) — V-3
- Laced Post Shore
  (at Plywood Laced Post use PLP in box) — LP
- Cribbing — C
- Raker Shore
  - Place vertical side of triangle against wall
  - Each triangle represents one Raker
  - Rakers should be installed groups of two or larger — R
- Horizontal Shore
  (H - 3 = 3 struts, H - 2 = 2 struts) — H-3
- Window or Door Shore (W or D) — W or D

1-31

DESIGN DEAD LOADS for BUILDING MATERIALS

Normal Reinforced Concrete = 150 pcf = .087 lbs per cubic inch
Struct. Steel = 490 pcf = .28 lbs per cubic inch
Aluminum = 165 pcf = .095 lbs per cubic inch
Masonry and Cement Plaster = 125 pcf
Dry Wood = 35 pcf Wet Wood = 45 to 60 pcf

Wood Joist@16″ o.c.	=	3 psf
3/4″ Wood Flooring	=	2.5 psf
5/8″ Gypsum Board	=	2.5 psf
Frame wall with1/2″ Gyp ea. Side	=	7 psf
Frame wall with 5/8″ Gyp ea. Side	=	8 psf
8″ PC Hollow Plank	=	60 psf
8″ Hollow Conc Masonry	=	40 psf
Concrete Masonry Rubble	=	10 psf per inch of thickness
Interior wood & metal stud walls	=	10 to 15 psf per floor
Normal home or office furniture	=	10 psf (more for storage)

Wood Floors weigh 10 psf to 25 psf (25 with 1.5″ conc fill)

Steel Floors with metal deck & conc fill weigh 50 to 70 psf

Concrete Floors weigh from 80 to 150 psf

RESCUE LIVE LOADS

Add 10 to 15 psf for Rescuers (4-250lb in 100 sq ft = 10 psf)
(Also need to account for heavy tools)

QUICK WEIGHT ESTIMATING (per square foot)

12" Concrete slab	= 150 psf	1" Steel plate	= 40 psf
10"	= 125 psf	3/4"	= 30 psf
9"	= 113 psf	5/8	= 25 psf
8"	= 100 psf	1/2"	= 20 psf
7"	= 88 psf	3/8"	= 15 psf
6"	= 75 psf	1/4"	= 10 psf
4"	= 50 psf	1/8"	= 5 psf

US&R SHORING OPERATIONS GUIDE
DISASTER SITE REFERENCE DATA

DESIGN DEAD LOADS for BUILDING MATERIALS

Normal Reinforced Concrete = 150 pcf = .087 lbs per cubic inch
Struct. Steel = 490 pcf = .28 lbs per cubic inch
Aluminum = 165 pcf = .095 lbs per cubic inch
Masonry and Cement Plaster = 125 pcf
Dry Wood = 35 pcf Wet Wood = 45 to 60 pcf

Wood Joist@16″ o.c.	=	3 psf
3/4″ Wood Flooring	=	2.5 psf
5/8″ Gypsum Board	=	2.5 psf
Frame wall with1/2″ Gyp ea. Side	=	7 psf
Frame wall with 5/8″ Gyp ea. Side	=	8 psf
8″ PC Hollow Plank	=	60 psf
8″ Hollow Conc Masonry	=	40 psf
Concrete Masonry Rubble	=	10 psf per inch of thickness
Interior wood & metal stud walls	=	10 to 15 psf per floor
Normal home or office furniture	=	10 psf (more for storage)

Wood Floors weigh 10 psf to 25 psf (25 with 1.5″ conc fill)

Steel Floors with metal deck & conc fill weigh 50 to 70 psf

Concrete Floors weigh from 80 to 150 psf

RESCUE LIVE LOADS

Add 10 to 15 psf for Rescuers (4-250lb in 100 sq ft = 10 psf)
(Also need to account for heavy tools)

QUICK WEIGHT ESTIMATING (per square foot)

12" Concrete slab	= 150 psf	1" Steel plate	= 40 psf
10"	= 125 psf	3/4"	= 30 psf
9"	= 113 psf	5/8	= 25 psf
8"	= 100 psf	1/2"	= 20 psf
7"	= 88 psf	3/8"	= 15 psf
6"	= 75 psf	1/4"	= 10 psf
4"	= 50 psf	1/8"	= 5 psf

1-32

INTRODUCTION to SECTION 2

This section contains General Information, Graphics and Detailed Explanations of how to construct FEMA Vertical Shoring – arranged as follows:

Key Design Parameters. Page 2-1
Estimated time to build Shores & Multi-Story Conditions. 2-2
Shoring Size-up, Inspection, and the Shoring Team. 2-4
Notes and Nailed Connections for Vertical Shores. 2-8
How to construct simple Vertical Shores 2-15
How to construct Laced Post & Ply'd Laced Post Shores 2-28
How to construct Sloped Floor Shores 2-38
Alternate Methods for building Vertical Shores 2-41
How to construct Cribbing +Window and Door Shores. 2-44
Vertical Shoring Systems using Pneumatic Struts. 2-53

KEY DESIGN PARAMETERS

- How to configure US&R Shoring to ensure a Predictable and Slow initial Failure Mode.
- How to sequence the construction of US&R shoring in order to Minimize Risk.
- Use of the Class 1, 2, and 3 System Approach:
  - Class 1 = 1 Dimensional
  - Class 2 = 2 Dimensional
  - Class 3 = 3 Dimensional
- All posts should be proportioned and/braced so that cupping of the wedges and crushing of header will occur before post buckling. This is assured if post L/D (Ht/Width) is 25 or less.
- Basic construction sequence should proceed as follows:
  - In very dangerous areas, it would be prudent to reduce risk by quickly installing Class 1 Spot Shores.
  - Follow w/ Class 2 (two or more post) Vertical Shores. (In some cases Class 2 shores may be built as initial shoring).
  - Finally, assure that all Shoring has all Posts braced in two directions as Class 3 Shores. An efficient way that this can be achieved is as follows:
    1. Place T or Double T shores initially if very dangerous.
    2. Then place pairs of 2-post Vertical Shores, 4 ft apart.
    3. Lastly tie 2-post vert. shores together as Laced Posts.

US&R SHORING OPERATIONS GUIDE
CONSTRUCTING VERTICAL SHORING SYSTEMS

INTRODUCTION to SECTION 2

This section contains General Information, Graphics and Detailed Explanations of how to construct FEMA Vertical Shoring – arranged as follows:

Key Design Parameters. Page 2-1
Estimated time to build Shores & Multi-Story Conditions. 2-2
Shoring Size-up, Inspection, and the Shoring Team. 2-4
Notes and Nailed Connections for Vertical Shores. 2-8
How to construct simple Vertical Shores 2-15
How to construct Laced Post & Ply'd Laced Post Shores 2-28
How to construct Sloped Floor Shores 2-38
Alternate Methods for building Vertical Shores 2-41
How to construct Cribbing +Window and Door Shores. 2-44
Vertical Shoring Systems using Pneumatic Struts. 2-53

2

KEY DESIGN PARAMETERS

- How to configure US&R Shoring to ensure a Predictable and Slow initial Failure Mode.
- How to sequence the construction of US&R shoring in order to Minimize Risk.
- Use of the Class 1, 2, and 3 System Approach:
  - Class 1 = 1 Dimensional
  - Class 2 = 2 Dimensional
  - Class 3 = 3 Dimensional
- All posts should be proportioned and/braced so that cupping of the wedges and crushing of header will occur before post buckling. This is assured if post L/D (Ht/Width) is 25 or less.
- Basic construction sequence should proceed as follows:
  - In very dangerous areas, it would be prudent to reduce risk by quickly installing Class 1 Spot Shores.
  - Follow w/ Class 2 (two or more post) Vertical Shores. (In some cases Class 2 shores may be built as initial shoring).
  - Finally, assure that all Shoring has all Posts braced in two directions as Class 3 Shores. An efficient way that this can be achieved is as follows:
    1. Place T or Double T shores initially if very dangerous.
    2. Then place pairs of 2-post Vertical Shores, 4 ft apart.
    3. Lastly tie 2-post vert. shores together as Laced Posts.

2-1

ESTIMATED TIME TO BUILD SHORES

The following table assumes that one, 6-person Rescue Squad is used, who has worked together before and has had proper training in building shoring. Also it is assumed that the tools, lumber and equipment are all laid out ready to go, along with a cutting table.

For Pre-Fabricated Shoring Placed in a Relatively Open Area

Shore Type	Pre-fab. Time	Install Time
T-Shore	5 – 8 min	60 sec
Dbl -T Shore	8 – 10 min	90 sec
2-Post Vert	8 – 10 min	90 sec
3-Post Vert	N/A	See In-place
Laced Post or PLP	10 – 12 min	12 – 15 min
Pr, Solid Sole Raker	20 min	12 – 15 min
Pr, Split Sole Raker	30 min	15 – 20 min
One Flying Raker	10 min	5 min
Prefab Window Shore	5 – 8 min	60 sec

For Built in Place Shores in a Relatively Open Area

Shore Type	Erection Time
2-Post Vertical	10 – 12 min
3-Post Vertical – 10ft max High	12 – 15 min
Laced Post or PLP	25 – 30 min
Crib-2x2 w/4x4 – 3ft High	5 – 8 min
Crib-2x2 w/4x4 – 6ft High	10 – 16 min
Crib 2x2 w/6x6 – 3ft High	8 – 10 min
Crib 2x2 w/6x6 – 6ft High	10 – 20 min
Window Shore	8 – 10 min
Door Shore	10 – 14 min
Pair, Sloped Floor Shores	20 – 25 min

NOTE for CARRY CONDITIONS

These times **Do Not** account for moving the pre- assembled shore into position or moving the material into position for the Built in Place Shores. That would have to be determined **On-Scene** at each event, and each area on the Site. (Carry Distance)

US&R SHORING OPERATIONS GUIDE
CONSTRUCTING VERTICAL SHORING SYSTEMS

ESTIMATED TIME TO BUILD SHORES

The following table assumes that one, 6-person Rescue Squad is used, who has worked together before and has had proper training in building shoring. Also it is assumed that the tools, lumber and equipment are all laid out ready to go, along with a cutting table.

For Pre-Fabricated Shoring Placed in a Relatively Open Area

Shore Type	Pre-fab. Time	Install Time
T-Shore	5 – 8 min	60 sec
Dbl -T Shore	8 – 10 min	90 sec
2-Post Vert	8 – 10 min	90 sec
3-Post Vert	N/A	See In-place
Laced Post or PLP	10 – 12 min	12 – 15 min
Pr, Solid Sole Raker	20 min	12 – 15 min
Pr, Split Sole Raker	30 min	15 – 20 min
One Flying Raker	10 min	5 min
Prefab Window Shore	5 – 8 min	60 sec

For Built in Place Shores in a Relatively Open Area

Shore Type	Erection Time
2-Post Vertical	10 – 12 min
3-Post Vertical – 10ft max High	12 – 15 min
Laced Post or PLP	25 – 30 min
Crib-2x2 w/4x4 – 3ft High	5 – 8 min
Crib-2x2 w/4x4 – 6ft High	10 – 16 min
Crib 2x2 w/6x6 – 3ft High	8 – 10 min
Crib 2x2 w/6x6 – 6ft High	10 – 20 min
Window Shore	8 – 10 min
Door Shore	10 – 14 min
Pair, Sloped Floor Shores	20 – 25 min

NOTE for CARRY CONDITIONS

These times Do Not account for moving the pre- assembled shore into position or moving the material into position for the Built in Place Shores. That would have to be determined On-Scene at each event, and each area on the Site. (Carry Distance)

2-2

TIME TO BUILD SHORES - SPECIFIC CONDITIONS

Example 1 (Vert, Crib, Laced Post & Sloped floor)

Like Pentagon, Puerto Rico, (similar to OKC)
1st & 2nd story, Shore your way in, remove debris as you go.
Material & cutting area within 200ft outside.
ADD 10 min for 1st floor and 15 min for 2nd floor.
Traveling thru heavy debris add 10minutes more.

Example 2 (Vert, Crib & Sloped floor)

10 story concrete bldg - Need to carry material upstairs into bldg.
Partly prefab in safe area on same floor. Need to move furniture, desks, etc to go 60 to 100 ft across floor to collapsed area.
ADD 5 min for each additional floor ascended.

Example 3 Each Pair of Raker Shores

12 ft insertion point up Tilt-up wall - AC paving, parking lot next to building not much debris.
Each Pair to be Assembled, Installed & Braced in 30 min.

Example 4 Each Pair of Raker Shores

9 ft insertion point up URM wall w/ some debris.
AC paving or Dirt next to wall.
Use Split sole Rakers w/ sloping sole.
Each Pair to be Assembled, Installed & Braced in 40 min.

MULTI-STORY CONDITIONS & SEQUENCING

When shoring a single damaged floor in multi-story building the following approach may be used:

- For Wood-frame,1-undamaged fl can support 1-damaged fl.
- For Steel-frame, 2- undamaged floors to support 1- damaged fl
- For Reinf. Conc, 3-undamaged floors to support 1- damaged fl.
- For Precast Conc, the shoring should extend to the ground.
- This does not apply to structures that are under construction, subject to cascading/progressive collapse, or to structures that have collapsed suddenly, without any apparent cause.
- Usually the best strategy for multi-story shoring is to start directly under the damaged floor, and work down.

US&R SHORING OPERATIONS GUIDE
CONSTRUCTING VERTICAL SHORING SYSTEMS

TIME TO BUILD SHORES - SPECIFIC CONDITIONS

Example 1 (Vert, Crib, Laced Post & Sloped floor)

Like Pentagon, Puerto Rico, (similar to OKC)
1st & 2nd story, Shore your way in, remove debris as you go.
Material & cutting area within 200ft outside.
ADD 10 min for 1st floor and 15 min for 2nd floor.
Traveling thru heavy debris add 10minutes more.

Example 2 (Vert, Crib & Sloped floor)

10 story concrete bldg - Need to carry material upstairs into bldg.
Partly prefab in safe area on same floor. Need to move furniture, desks, etc to go 60 to 100 ft across floor to collapsed area.
ADD 5 min for each additional floor ascended.

2

Example 3 Each Pair of Raker Shores

12 ft insertion point up Tilt-up wall - AC paving, parking lot next to building not much debris.
Each Pair to be Assembled, Installed & Braced in 30 min.

Example 4 Each Pair of Raker Shores

9 ft insertion point up URM wall w/ some debris.
AC paving or Dirt next to wall.
Use Split sole Rakers w/ sloping sole.
Each Pair to be Assembled, Installed & Braced in 40 min.

MULTI-STORY CONDITIONS & SEQUENCING

When shoring a single damaged floor in multi-story building the following approach may be used:

- For Wood-frame,1-undamaged fl can support 1-damaged fl.
- For Steel-frame, 2- undamaged floors to support 1- damaged fl
- For Reinf. Conc, 3-undamaged floors to support 1- damaged fl.
- For Precast Conc, the shoring should extend to the ground.
- This does not apply to structures that are under construction, subject to cascading/progressive collapse, or to structures that have collapsed suddenly, without any apparent cause.
- Usually the best strategy for multi-story shoring is to start directly under the damaged floor, and work down.

2-3

US&R SHORING OPERATIONS GUIDE
CONSTRUCTING VERTICAL SHORING SYSTEMS
SHORING SIZEUP

Seek assistance from a US&R Structures Specialist (StS).

Identify damage, hazards, and potential victim locations.

1. What caused collapse? Potential for aftershocks, etc.?
2. What is the remaining Potential Energy? (heavy objects above ground that can become a secondary collapse).
   - Open voids with questionable support?.
   - Long Columns that can buckle?
   - Leaning building with racked openings?
   - Leaning vs Plumb walls, and Heavy vs Light walls?
3. What type of structure? Wood, CIP Concrete, PC Concrete, URM? Brittle or Ductile Structure?
4. Are floors sloped? Is there a ladder affect pushing out on the supporting wall? Is the floor hinged?
5. Where are victims, and what is most efficient way to mitigate the hazards, access, and extricate victims?

If shoring is to be built, determine type and placement of shoring systems in relation to hazards & victim location.

6. Where/what to shore; How to sequence order to minimize risk.
7. Shore near and under victims; Shore from outside to in.
8. What will support the shoring: Slab on ground; Soil; Basement slab; or Upper story slab?
   - Multi level shores should bear on each other.
9. What is type & condition of structure: Solid but cracked slabs; beams supporting slabs or joist; beamless slabs; wood or steel trusses; or badly cracked concrete?
   - Shore under debris pile.
10. Look for: Broken connections; Out of plumb; Racked openings; sagging or sloped floors; Bulged or cracked floors.
11. Shoring beams that support slabs or joists is most desirable. Check for sagging beams/girders, & with damaged connections.
12. For wood structures, place shores perpendicular to joist and align posts under joist. Support beams that support joist.
13. Use Sloped Floor Shores & Cribbing for limited ht. conditions.

US&R SHORING OPERATIONS GUIDE
CONSTRUCTING VERTICAL SHORING SYSTEMS
SHORING SIZEUP

Seek assistance from a US&R Structures Specialist (StS).

Identify damage, hazards, and potential victim locations.

1. What caused collapse? Potential for aftershocks, etc.?
2. What is the remaining Potential Energy? (heavy objects above ground that can become a secondary collapse).
   - Open voids with questionable support?.
   - Long Columns that can buckle?
   - Leaning building with racked openings?
   - Leaning vs Plumb walls, and Heavy vs Light walls?
3. What type of structure? Wood, CIP Concrete, PC Concrete, URM? Brittle or Ductile Structure?
4. Are floors sloped? Is there a ladder affect pushing out on the supporting wall? Is the floor hinged?
5. Where are victims, and what is most efficient way to mitigate the hazards, access, and extricate victims?

If shoring is to be built, determine type and placement of shoring systems in relation to hazards & victim location.

6. Where/what to shore; How to sequence order to minimize risk.
7. Shore near and under victims; Shore from outside to in.
8. What will support the shoring: Slab on ground; Soil; Basement slab; or Upper story slab?
   - Multi level shores should bear on each other.
9. What is type & condition of structure: Solid but cracked slabs; beams supporting slabs or joist; beamless slabs; wood or steel trusses; or badly cracked concrete?
   - Shore under debris pile.
10. Look for: Broken connections; Out of plumb; Racked openings; sagging or sloped floors; Bulged or cracked floors.
11. Shoring beams that support slabs or joists is most desirable. Check for sagging beams/girders, & with damaged connections.
12. For wood structures, place shores perpendicular to joist and align posts under joist. Support beams that support joist.
13. Use Sloped Floor Shores & Cribbing for limited ht. conditions.

2-4

SHORING SIZEUP (continued)

Prepare the area to be shored:

1. May need to remove debris and floor coverings.
   - Install temporary, spot shores if needed – reduce risk.
2. If soil supported, use an 18"x18" foot under post locations.
3. Consider temporary shores to reduce risk (T or Dbl-T).
4. Prefabricate shoring as much as possible to reduce risk.
5. Add bracing after wedges are tightened.

SHORING INSPECTION

Inspect shores every 12 hours (Shift Change), and/or following any known loading change such as:

1. Aftershocks
2. High Winds,
3. Secondary Explosion,
4. Load Shift and/or Change.

Check for proper construction of shore

1. Check to see if posts are straight, plumb, and have full bearing on header and wedges.
2. Are connections tight and wedges snug?
3. Is header in full contact with supported structure?
4. Has sole deflected due to soft soil or support?
5. Are all components of shoring system in place?

Check for signs of overload.

6. Cupping of wedges and crushing of sole.
7. Crushing of header at post.
8. Splitting of header at end of overhang.

Actions to be taken if signs of overload are observed.

9. Add additional shoring.
10. Have structure re-evaluated by a StS to see if it is responding differently than expected.
11. Check assumptions of original shoring design.

US&R SHORING OPERATIONS GUIDE
CONSTRUCTING VERTICAL SHORING SYSTEMS

SHORING SIZEUP (continued)

Prepare the area to be shored:

1. May need to remove debris and floor coverings.
   - Install temporary, spot shores if needed – reduce risk.
2. If soil supported, use an 18"x18" foot under post locations.
3. Consider temporary shores to reduce risk (T or Dbl-T).
4. Prefabricate shoring as much as possible to reduce risk.
5. Add bracing after wedges are tightened.

SHORING INSPECTION

2

Inspect shores every 12 hours (Shift Change), and/or following any known loading change such as:

1. Aftershocks
2. High Winds,
3. Secondary Explosion,
4. Load Shift and/or Change.

Check for proper construction of shore

1. Check to see if posts are straight, plumb, and have full bearing on header and wedges.
2. Are connections tight and wedges snug?
3. Is header in full contact with supported structure?
4. Has sole deflected due to soft soil or support?
5. Are all components of shoring system in place?

Check for signs of overload.

6. Cupping of wedges and crushing of sole.
7. Crushing of header at post.
8. Splitting of header at end of overhang.

Actions to be taken if signs of overload are observed.

9. Add additional shoring.
10. Have structure re-evaluated by a StS to see if it is responding differently than expected.
11. Check assumptions of original shoring design.

2-5

THE SHORING TEAMS

To conduct Shoring Operations safely and efficiently, two separate Shoring Teams are formed.

1. **The Shore Assembly Team** – Performs the actual shoring size-up and construction of the shores.
2. **The Cutting Team** – Establishes the equipment area and cuts the shoring lumber.
3. The Shore Assembly Team consists of the following:
   a. The **Shoring Officer** (Rescue Squad Officer) – is in-charge of the operation and works with the **Structures Spec** to determine where to place and erect the shores.
   b. The **Measure** – performs all the measuring required in the erection of the shoring and relays all measurements and lumber size to the **Layout** of the Cutting Team.
   c. **Shores** – clears away debris and obstructions that could interfere with shore construction. He also assists the **Measure** as needed to erect the shores.
4. **The Cutting Team**

The initial responsibility of the cutting team is to secure an area as close as possible to the collapse operation to minimize the number of personnel needed to relay the materials to the shore assembly team. The assistance of several other personnel may be required to help expedite the movement of lumber/tools to the collapse area.

a. The **Layout** – is in charge of setting up the cutting station and preparing the materials to be cut.
   - Performs all measuring, layout of angle and should be in direct contact with the shore assembly team **Measure** via portable radio to eliminate mis-communications on dimensions, etc.

b. The **Cutter** – cuts the shoring material.

US&R SHORING OPERATIONS GUIDE
CONSTRUCTING VERTICAL SHORING SYSTEMS

THE SHORING TEAMS

To conduct Shoring Operations safely and efficiently, two separate Shoring Teams are formed.

1. **The Shore Assembly Team** – Performs the actual shoring size-up and construction of the shores.
2. **The Cutting Team** – Establishes the equipment area and cuts the shoring lumber.
3. The Shore Assembly Team consists of the following:
   a. The **Shoring Officer** (Rescue Squad Officer) – is in-charge of the operation and works with the **Structures Spec** to determine where to place and erect the shores.
   b. The **Measure** – performs all the measuring required in the erection of the shoring and relays all measurements and lumber size to the **Layout** of the Cutting Team.
   c. **Shores** – clears away debris and obstructions that could interfere with shore construction. He also assists the **Measure** as needed to erect the shores.
4. **The Cutting Team**

The initial responsibility of the cutting team is to secure an area as close as possible to the collapse operation to minimize the number of personnel needed to relay the materials to the shore assembly team. The assistance of several other personnel may be required to help expedite the movement of lumber/tools to the collapse area.

a. The **Layout** – is in charge of setting up the cutting station and preparing the materials to be cut.
   - Performs all measuring, layout of angle and should be in direct contact with the shore assembly team **Measure** via portable radio to eliminate mis-communications on dimensions, etc.

b. The **Cutter** – cuts the shoring material.

2-6

THE SHORING TEAMS (continued)

c. **Tools and Equipment** – directs the movement of tools and equipment to be placed where they are requested, anticipates logistical needs of the shoring team and keeps an inventory checklist/log sheet for easier retrieval of tools and equipment at the conclusion of rescue operations.

5. A single Rescue Squad can normally fill the six individual shoring team positions during most shoring operations.
6. Larger or more complex shoring operations may require Two Rescue Squads, with One squad assigned to the Shore Assembly Team and the Other assigned to the Cutting Team.
7. **Shore Assembly Team** with a Six person Rescue Squad:
   a. The **Shoring Officer** (Rescue Squad Officer)
   b. The **Measure**
   c. **Shores**
   d. **Shores**
   e. **Safety**
   f. **Runner** – ensures tools, equipment, and shoring materials are moved from the shoring operation primary access point to the shoring site and assists in the erection of shores as needed.
8. Cutting Team with a complete Six person Rescue Squad:
   a. The **Cutting Team Officer** (Rescue Squad Officer)
   b. The **Layout**
   c. The **Feeder** – moves and feeds measured and marked shoring material from the **Layout** to the **Cutter** and helps secure it when being cut.
   d. The **Cutter**
   e. **Tools and Equipment**
   f. **Runner** – ensures tools, equipment, and shoring materials are moved from the cutting area to the shoring operation primary access point.

US&R SHORING OPERATIONS GUIDE
CONSTRUCTING VERTICAL SHORING SYSTEMS

THE SHORING TEAMS (continued)

c. Tools and Equipment – directs the movement of tools and equipment to be placed where they are requested, anticipates logistical needs of the shoring team and keeps an inventory checklist/log sheet for easier retrieval of tools and equipment at the conclusion of rescue operations.

5. A single Rescue Squad can normally fill the six individual shoring team positions during most shoring operations.
6. Larger or more complex shoring operations may require Two Rescue Squads, with One squad assigned to the Shore Assembly Team and the Other assigned to the Cutting Team.
7. Shore Assembly Team with a Six person Rescue Squad:
   a. The Shoring Officer (Rescue Squad Officer)
   b. The Measure
   c. Shores
   d. Shores
   e. Safety
   f. Runner – ensures tools, equipment, and shoring materials are moved from the shoring operation primary access point to the shoring site and assists in the erection of shores as needed.
8. Cutting Team with a complete Six person Rescue Squad:
   a. The Cutting Team Officer (Rescue Squad Officer)
   b. The Layout
   c. The Feeder – moves and feeds measured and marked shoring material from the Layout to the Cutter and helps secure it when being cut.
   d. The Cutter
   e. Tools and Equipment
   f. Runner – ensures tools, equipment, and shoring materials are moved from the cutting area to the shoring operation primary access point.

2-7

2

NOTES REGARDING SHORE STRENGTH

1. The strength of **Wood Systems** depend on the following:
   - Perpendicular to grain bearing of Post on Header.
   - Vertical capacity of Posts (based on Height (Length).
   - Strength of Header and Sole.
   - Strength of ground or floor slab below **Sole.**
2. The size of a **Header** depends on the stiffness of the header compared to the structure being supported:
   - When supporting intact concrete slabs, the concrete structure is usually much stiffer than the header. In this case, as long as the posts are no more than 4 ft o.c.(5 ft for 6x6), the minimum, 4x4 or 6x6 header may be used.
   - When supporting a wood floor, header should be a depth of 1" for each foot of clear span between posts – 4x4 min.
   - For all other conditions, the header should be designed for the actual load, by a US&R Structures Specialist.
3. The Total Length of 2x4 & 2x6 Lacing (diagonal bracing members that are capable of resisting both Tension and Compression) should be limited to 7'-6".
4. If the length of 2x4 & 2x6 diagonal bracing members is greater than 7'-6", then they must be configured as X-bracing, since each member is only capable of resisting **Tension**.
5. **Pickets** are 1" dia. x 36" min., Grade A-36 plain steel rods or Grade 60 rebar, driven a minimum of 24" into soil or paving.
6. **Shoring Numbers to Remember (Doug Fir & So. Pine)**
   - **8, 20, 24, 32, 5**
   - **8K** is Design Strength of **4x4 Post, 8ft long**
   - **20K** is Design Strength of **6x6 Post, 12ft long**
   - **24K** is Design Strength of **2x2 lay-up of 4x4 Crib**
   - **32K** is Design Strength of **4x4 Laced Post**
   - **5K** is Design Strength of **4x Raker System**
     (2 – 45 or 60 deg Rakers + adequate bracing)

US&R SHORING OPERATIONS GUIDE
CONSTRUCTING VERTICAL SHORING SYSTEMS

NOTES REGARDING SHORE STRENGTH

1. The strength of **Wood Systems** depend on the following:
   - Perpendicular to grain bearing of Post on Header.
   - Vertical capacity of Posts (based on Height (Length).
   - Strength of Header and Sole.
   - Strength of ground or floor slab below **Sole.**
2. The size of a **Header** depends on the stiffness of the header compared to the structure being supported:
   - When supporting intact concrete slabs, the concrete structure is usually much stiffer than the header. In this case, as long as the posts are no more than 4 ft o.c.(5 ft for 6x6), the minimum, 4x4 or 6x6 header may be used.
   - When supporting a wood floor, header should be a depth of 1" for each foot of clear span between posts – 4x4 min.
   - For all other conditions, the header should be designed for the actual load, by a US&R Structures Specialist.
3. The Total Length of 2x4 & 2x6 Lacing (diagonal bracing members that are capable of resisting both Tension and Compression) should be limited to 7'-6".
4. If the length of 2x4 & 2x6 diagonal bracing members is greater than 7'-6", then they must be configured as X-bracing, since each member is only capable of resisting **Tension**.
5. **Pickets** are 1" dia. x 36" min., Grade A-36 plain steel rods or Grade 60 rebar, driven a minimum of 24" into soil or paving.
6. **Shoring Numbers to Remember (Doug Fir & So. Pine)**
   - **8, 20, 24, 32, 5**
   - **8K** is Design Strength of **4x4 Post, 8ft long**
   - **20K** is Design Strength of **6x6 Post, 12ft long**
   - **24K** is Design Strength of **2x2 lay-up of 4x4 Crib**
   - **32K** is Design Strength of **4x4 Laced Post**
   - **5K** is Design Strength of **4x Raker System**
     (2 – 45 or 60 deg Rakers + adequate bracing)

2-8

NOTES for VERTICAL SHORING DIAGRAMS

1. Maximum Post Heights have been specified as 10'-3", 12'-3", etc. , and Shore is then limited to next Full Foot in Height.
2. Design Load (Safe Working Load) for Class 1 & 2 Shores is based on Shore Height. (Not post length).
3. The use of 4x4 & 6x6 Headers is desirable, since this maintains a relatively stable1 to 1 height to width ratio. This allows the use of one sided connections to headers.
4. It is desirable to use 2-sided connections at Posts to Sole Plates at Wedges. The connectors should be 6"x12", Half Gussets each side, or a 2x Diagonal Brace one side and Gusset to opposite side. Gussets may be cut from 5/8" or 3/4" plywood or Oriented Strand Board (OSB).
5. For wood or light metal floor/roof systems, 1-sided connections, at wedges, may be used in situations where lateral displacement of the shore is unlikely. Displacement may be caused by lateral loads, vibrations, and/or structural shifting.
6. Use of 4x4 Headers for 4ft o.c. Posts and 6x6 for 5ft o.c. Posts is based on supporting Normal Wood Floors and Intact Concrete Floors. For supporting badly cracked Concrete Floors, and for shores with larger post spacing, obtain special design by US&R Structures Specialist.
7. Backing above Headers may be required if one is supporting a badly cracked concrete or masonry structure.
   - May use 2x10 or 2x12, full length centered on top of header, or 8ft long strips of 12" to 16" wide, 3/4" plywood.
8. Backing should be used under the Sole at each post when bearing on soil. Use 3-2x6x18"or 2-layers of 18"x18"x 3/4" plywood centered under posts. See below:

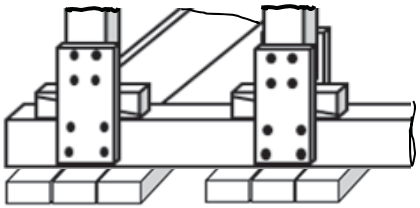

US&R SHORING OPERATIONS GUIDE
CONSTRUCTING VERTICAL SHORING SYSTEMS

NOTES for VERTICAL SHORING DIAGRAMS

1. Maximum Post Heights have been specified as 10'-3", 12'-3", etc. , and Shore is then limited to next Full Foot in Height.
2. Design Load (Safe Working Load) for Class 1 & 2 Shores is based on Shore Height. (Not post length).
3. The use of 4x4 & 6x6 Headers is desirable, since this maintains a relatively stable1 to 1 height to width ratio. This allows the use of one sided connections to headers.
4. It is desirable to use 2-sided connections at Posts to Sole Plates at Wedges. The connectors should be 6"x12", Half Gussets each side, or a 2x Diagonal Brace one side and Gusset to opposite side. Gussets may be cut from 5/8" or 3/4" plywood or Oriented Strand Board (OSB).
5. For wood or light metal floor/roof systems, 1-sided connections, at wedges, may be used in situations where lateral displacement of the shore is unlikely. Displacement may be caused by lateral loads, vibrations, and/or structural shifting.
6. Use of 4x4 Headers for 4ft o.c. Posts and 6x6 for 5ft o.c. Posts is based on supporting Normal Wood Floors and Intact Concrete Floors. For supporting badly cracked Concrete Floors, and for shores with larger post spacing, obtain special design by US&R Structures Specialist.
7. Backing above Headers may be required if one is supporting a badly cracked concrete or masonry structure.
   - May use 2x10 or 2x12, full length centered on top of header, or 8ft long strips of 12" to 16" wide, 3/4" plywood.
8. Backing should be used under the Sole at each post when bearing on soil. Use 3-2x6x18"or 2-layers of 18"x18"x 3/4" plywood centered under posts. See below:

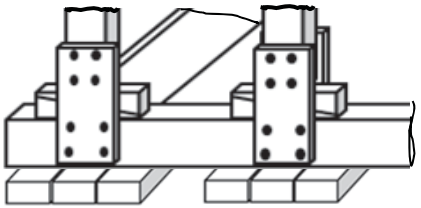

2-9

2

NAILED CONNECTIONS for VERTICAL SHORES

Nails are used to connect members together in Vertical Shores, but not to transfer direct loads.

Standard 5 - Nail Patterns

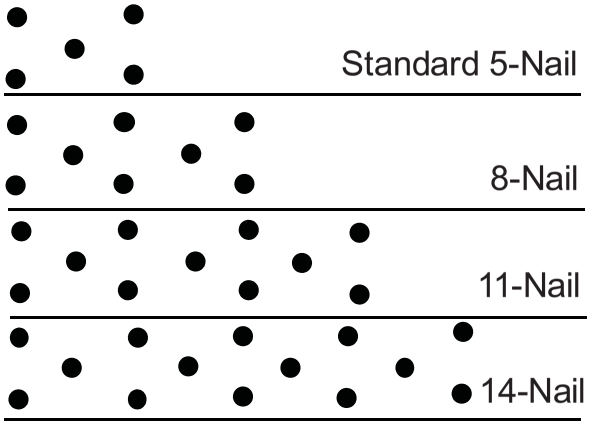

Nail Standards

1. Hand or gun driven nails may be used, however gun driven nails normally produce less impact vibration. Palm Nailers produce the least amount of vibration.
2. Full head nails are preferred, but the head is set off-center for most gun nailers.
3. Clip head nails may be used, but care must be taken to not over-drive the nails. No V head

   Clip Head - OK V head - NO
4. The preferred 16d nail is a 0.148" x 3.25" sinker/cooler nail. (Std 16d nails are 0.162" x 3.5" and tend to split the wood).
5. 8d nails should be 0.131" x 2.5" with a plastic coating.
6. Duplex nails are used in some cases at wedges, in order to allow for pulling the nails when adjusting the wedges.

US&R SHORING OPERATIONS GUIDE
CONSTRUCTING VERTICAL SHORING SYSTEMS

NAILED CONNECTIONS for VERTICAL SHORES

Nails are used to connect members together in Vertical Shores, but not to transfer direct loads.

Standard 5 - Nail Patterns

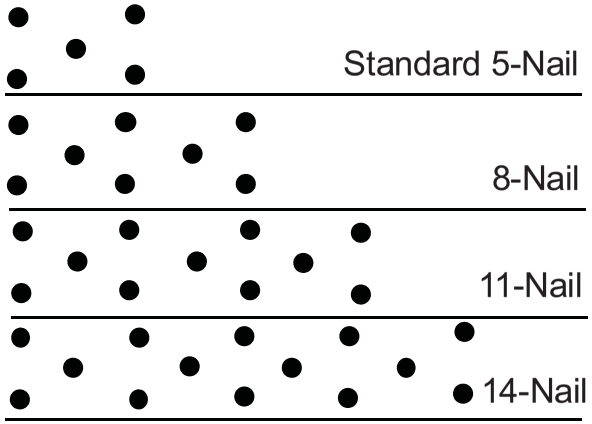

Nail Standards

1. Hand or gun driven nails may be used, however gun driven nails normally produce less impact vibration. Palm Nailers produce the least amount of vibration.
2. Full head nails are preferred, but the head is set off-center for most gun nailers.
3. Clip head nails may be used, but care must be taken to not over-drive the nails. No V head

   Clip Head - OK V head - NO
4. The preferred 16d nail is a 0.148" x 3.25" sinker/cooler nail. (Std 16d nails are 0.162" x 3.5" and tend to split the wood).
5. 8d nails should be 0.131" x 2.5" with a plastic coating.
6. Duplex nails are used in some cases at wedges, in order to allow for pulling the nails when adjusting the wedges.

2-10

PLYWOOD GUSSETS and BRACES

Plywood may be 5/8" or 3/4" thick, (or may use OSB where wet conditions will not occur) Use 8d nails.

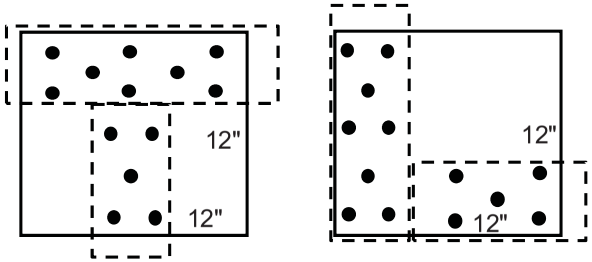

T-Shore – Header/Post **Raker – 3 locations**

FULL GUSSET – 12" X 12"

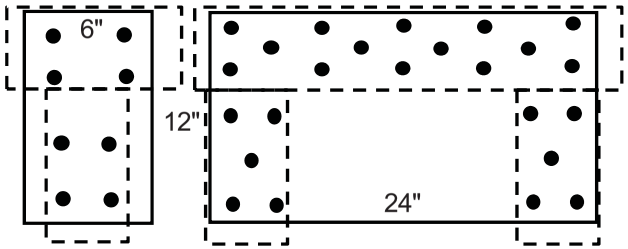

Half Gusset at Vertical Shore **Dbl Gusset to Header - Dbl T & 2'x 4' PLP**

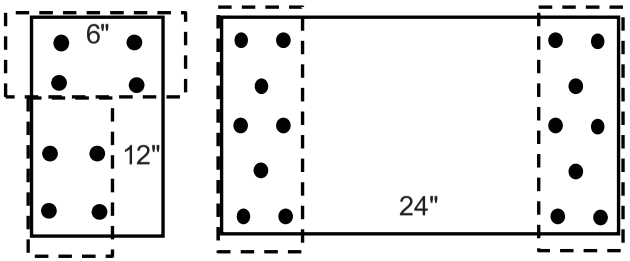

Half Gusset at 2-Post & Laced Post **Dbl Gusset for Dbl T Mid-braces**

HALF AND DOUBLE GUSSETS

US&R SHORING OPERATIONS GUIDE
CONSTRUCTING VERTICAL SHORING SYSTEMS

PLYWOOD GUSSETS and BRACES

Plywood may be 5/8" or 3/4" thick, (or may use OSB where wet conditions will not occur) Use 8d nails.

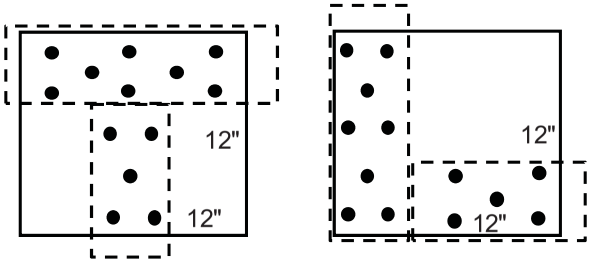

T-Shore – Header/Post Raker – 3 locations

FULL GUSSET – 12" X 12"

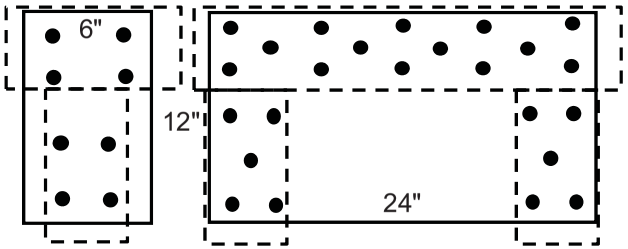

Half Gusset at Vertical Shore Dbl Gusset to Header - Dbl T & 2'x 4' PLP

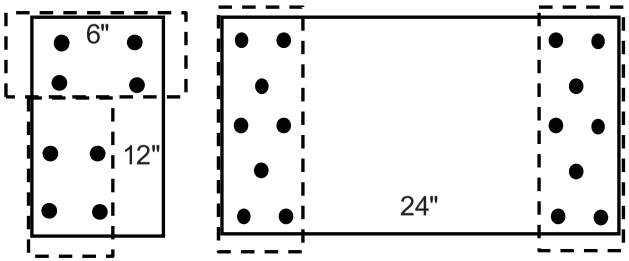

Half Gusset at 2-Post & Laced Post Dbl Gusset for Dbl T Mid-braces

HALF AND DOUBLE GUSSETS

2-11

PLYWOOD BRACES (continued)

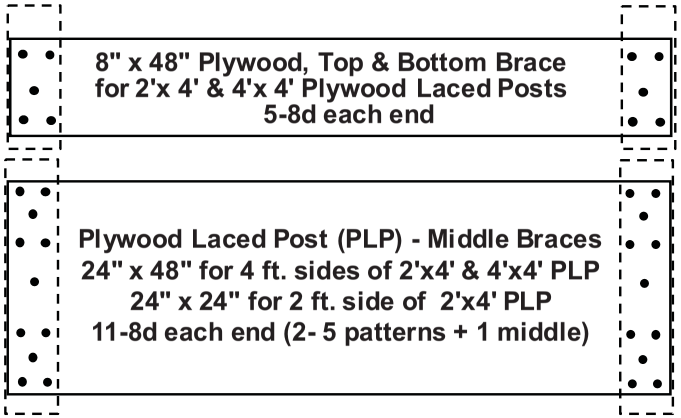

PLYWOOD BRACES FOR PLP

NAILED CONNECTIONS (2x6 and 2x4 Braces)

Use 16d coated nails (0.148" x 3.25").
Also note placement of nails away from the ends of the 2x.

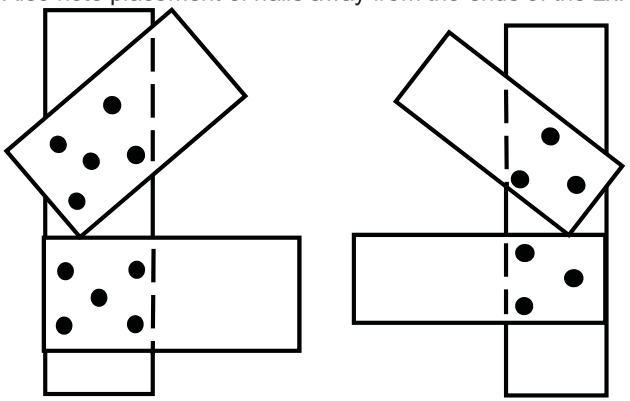

2x6 to POSTS **2x4 to POSTS**

US&R SHORING OPERATIONS GUIDE
CONSTRUCTING VERTICAL SHORING SYSTEMS

PLYWOOD BRACES (continued)

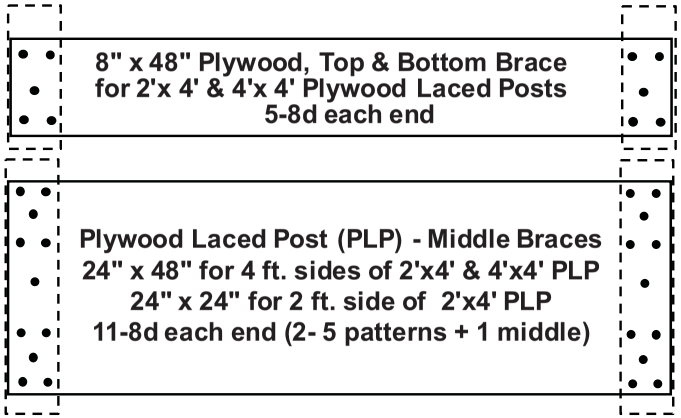

PLYWOOD BRACES FOR PLP

NAILED CONNECTIONS (2x6 and 2x4 Braces)

Use 16d coated nails (0.148" x 3.25").
Also note placement of nails away from the ends of the 2x.

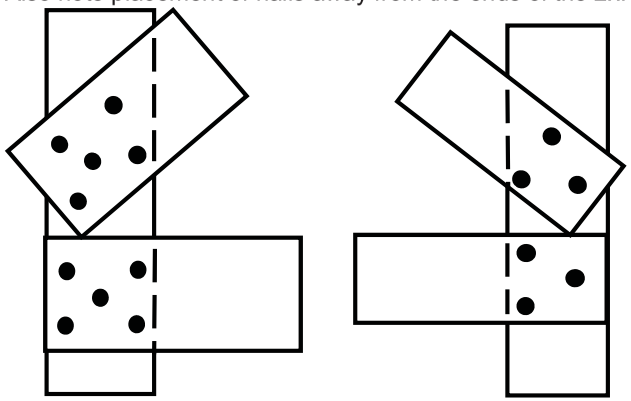

2x6 to POSTS 2x4 to POSTS

2-12

NAILED CONNECTIONS of 2x6 and 2x4 to HEADER

2x4 & 2x6 diagonal braces are used here to provide bracing, as well as connect the post to the header. Carefully place diagonal so that required nails can be driven without splitting the post. **(For conditions where 5-16d will split the post, 3-16d may be used)**

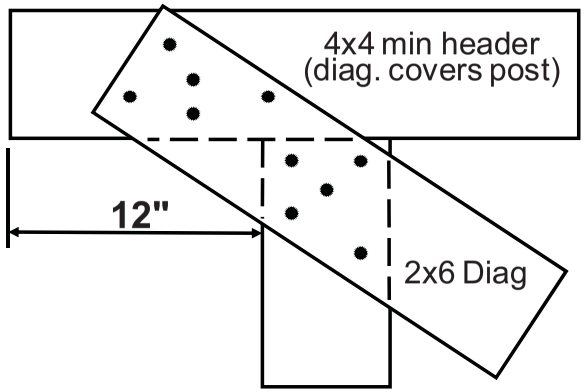

End Post to Header Connection at Vertical Shore

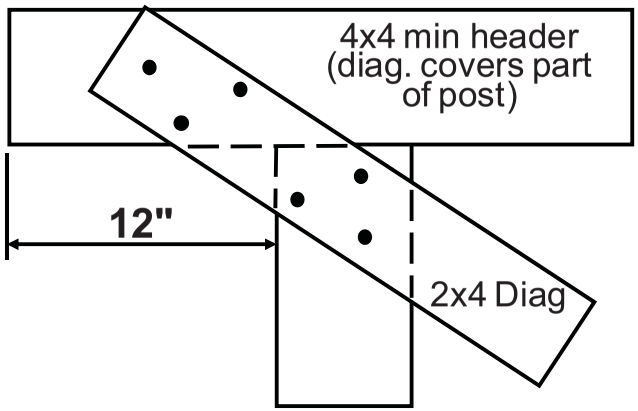

Post to Header Connection at 2-Post Shore

US&R SHORING OPERATIONS GUIDE
CONSTRUCTING VERTICAL SHORING SYSTEMS

NAILED CONNECTIONS of 2x6 and 2x4 to HEADER

2x4 & 2x6 diagonal braces are used here to provide bracing, as well as connect the post to the header. Carefully place diagonal so that required nails can be driven without splitting the post. (For conditions where 5-16d will split the post, 3-16d may be used)

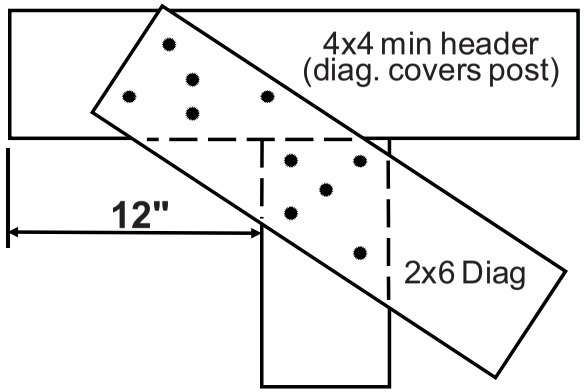

End Post to Header Connection at Vertical Shore

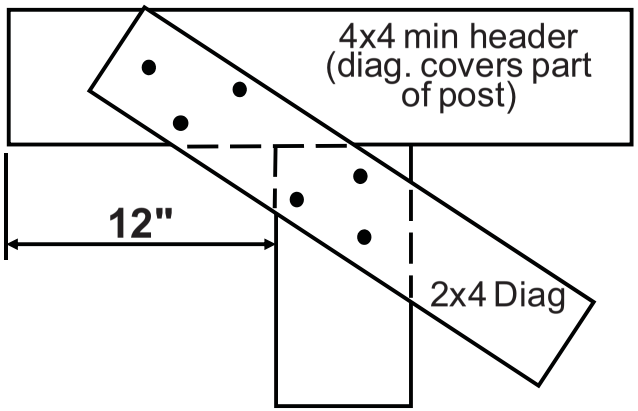

Post to Header Connection at 2-Post Shore

CUTTING TABLE & JIG

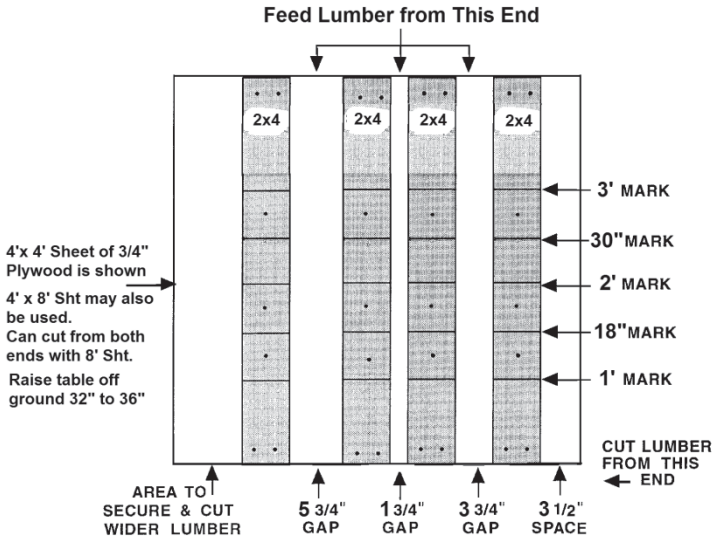

DETAILS at 2x4 or 4x4,6 WEDGES

Sloped surfaces must be in full contact.
May use 16d duplex keeper nails.
2x4 wedges are 12" long, & 4x4 or 4x6 wedges are 18" long

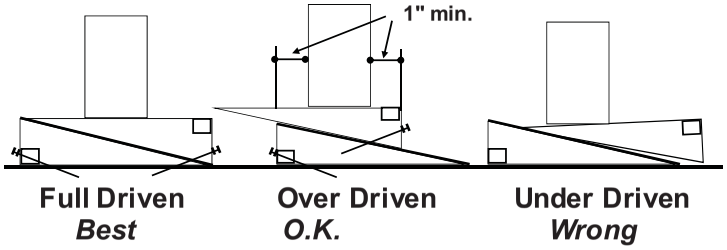

US&R SHORING OPERATIONS GUIDE
CONSTRUCTING VERTICAL SHORING SYSTEMS

CUTTING TABLE & JIG

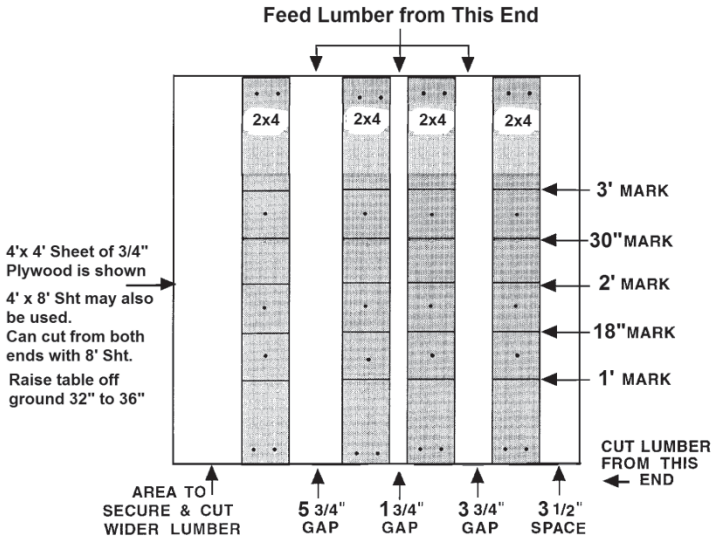

DETAILS at 2x4 or 4x4,6 WEDGES
Sloped surfaces must be in full contact.
May use 16d duplex keeper nails.
2x4 wedges are 12" long, & 4x4 or 4x6 wedges are 18" long

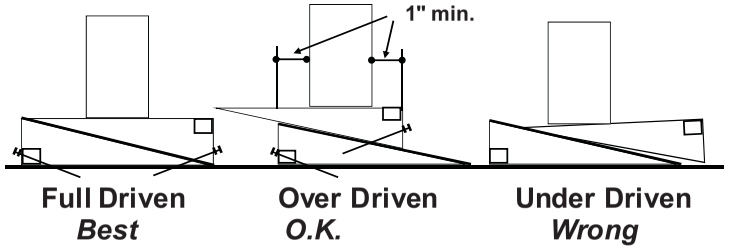

2-14

How to Construct Vertical Shores

- T-Shore Page 2-16
- Double T Shore 2-18
- Vertical Shore – Multi Post 2-20
- 2-Post Vertical Shore 2-24
- Laced Post Shore 2-28
- 2' x 4' Plywood Laced Post Shore 2-32
- 4' x 4' Plywood Laced Post Shore 2-35
- Type 2 Sloped Floor Shore 2-38
- Alternate Methods for Vertical Shores 2-41
- Type 3 Sloped Post Shore 2-42
- Cribbing 2-44

US&R SHORING OPERATIONS GUIDE
CONSTRUCTING VERTICAL SHORING SYSTEMS

How to Construct Vertical Shores

- T-Shore Page 2-16
- Double T Shore 2-18
- Vertical Shore – Multi Post 2-20
- 2-Post Vertical Shore 2-24
- Laced Post Shore 2-28
- 2' x 4' Plywood Laced Post Shore 2-32
- 4' x 4' Plywood Laced Post Shore 2-35
- Type 2 Sloped Floor Shore 2-38
- Alternate Methods for Vertical Shores 2-41
- Type 3 Sloped Post Shore 2-42
- Cribbing 2-44

2

2-15

T SPOT SHORE (Vertical/Class 1)

Rapidly installed temporary shore, intended to be used only until a complete shoring system can be installed. It can become unstable if it is not centered under the load.	
Material List:	
Header and Sole	One Wedge Set
One Post	2 Full Gussets
	One Half Gusset

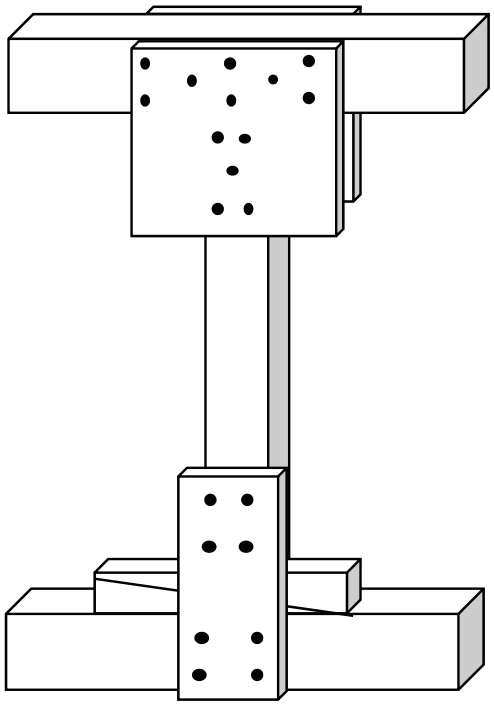

Design Load is 4,000lb –ONLY IF LOAD IS CENTERED
Maximum Height = 11 ft

US&R SHORING OPERATIONS GUIDE
CONSTRUCTING VERTICAL SHORING SYSTEMS

T SPOT SHORE (Vertical/Class 1)

Rapidly installed temporary shore, intended to be used only until a complete shoring system can be installed. It can become unstable if it is not centered under the load.	
Material List:	
Header and Sole	One Wedge Set
One Post	2 Full Gussets
	One Half Gusset

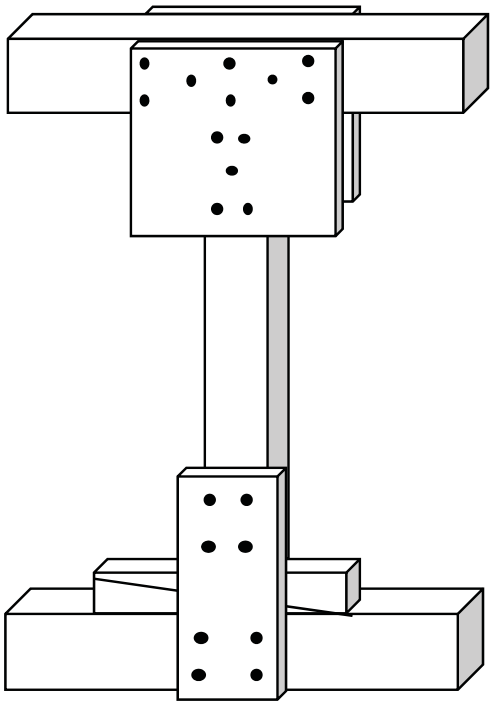

Design Load is 4,000lb –ONLY IF LOAD IS CENTERED
Maximum Height = 11 ft

2-16

HOW TO CONSTRUCT THE T SPOT SHORE

1. Determine where T Spot Shores should be built in order to quickly reduce risk. (Prior to building more stable shores).
2. Determine height of area to be shored and remove least amount of debris required to place the shore.
3. The 4x4 post should be 10'-3" max long, so that the total height of the shore is not more than 11 feet.
4. Cut header and Sole to 3 feet long.
5. Cut post to proper height (remember to deduct header, sole and wedge height when cutting post).
6. Prefabricate header to post.

- Toe-nail post to header and make square.
- Place and nail Full Gusset plate on one side.
- Flip shore over and place/nail another Full Gusset on other side.

7. Place T Shore in position, centered under the load.
8. Position header across (perpendicular to) the roof/floor joists and position the post directly under a joist.
9. Slide sole plate under T and tap wedges into position.
10. Check for straightness & position directly under the load, and then tighten the wedges.
11. Install bottom Half Gusset; nail 4-8d to post and to sole.
12. Note that a 2 x 4 x 18" cleat may be used, but the 3-16d nails to post and sole may tend to split the cleat. Also the nailing of 16d causes more impact within the danger zone than for 8d nails.
13. Anchor the shore to floor above and sole to floor below, if practical.

US&R SHORING OPERATIONS GUIDE
CONSTRUCTING VERTICAL SHORING SYSTEMS

HOW TO CONSTRUCT THE T SPOT SHORE

1. Determine where T Spot Shores should be built in order to quickly reduce risk. (Prior to building more stable shores).
2. Determine height of area to be shored and remove least amount of debris required to place the shore.
3. The 4x4 post should be 10'-3" max long, so that the total height of the shore is not more than 11 feet.
4. Cut header and Sole to 3 feet long.
5. Cut post to proper height (remember to deduct header, sole and wedge height when cutting post).
6. Prefabricate header to post.

- Toe-nail post to header and make square.
- Place and nail Full Gusset plate on one side.
- Flip shore over and place/nail another Full Gusset on other side.

7. Place T Shore in position, centered under the load.
8. Position header across (perpendicular to) the roof/floor joists and position the post directly under a joist.
9. Slide sole plate under T and tap wedges into position.
10. Check for straightness & position directly under the load, and then tighten the wedges.
11. Install bottom Half Gusset; nail 4-8d to post and to sole.
12. Note that a 2 x 4 x 18" cleat may be used, but the 3-16d nails to post and sole may tend to split the cleat. Also the nailing of 16d causes more impact within the danger zone than for 8d nails.
13. Anchor the shore to floor above and sole to floor below, if practical.

2

2-17

DOUBLE T SHORE (Vertical Class 2)

This is the most stable spot shore, and much preferred to the marginally stable**, T-Shore**.	
Material List:	
Header and Sole	2 - Half Gussets
2 - Posts	2 - Wedge Sets
2 - Double Gussets	One 12"x 24" ply mid- brace

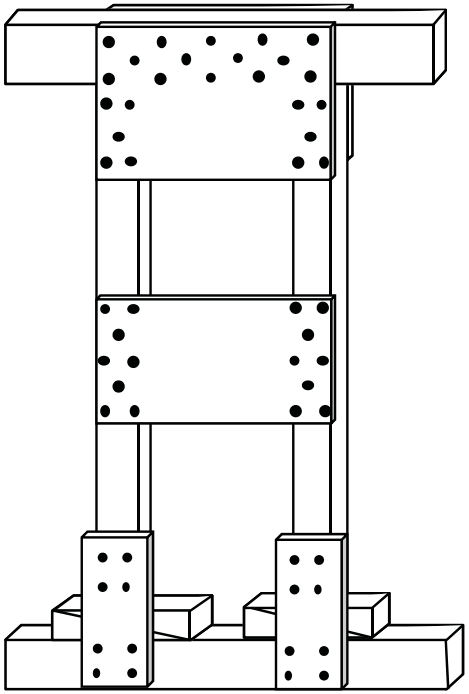

Design Load – based on shore height
16,000lb – 8 ft, 10,000lb – 10ft, 7,000lb – 12ft

US&R SHORING OPERATIONS GUIDE
CONSTRUCTING VERTICAL SHORING SYSTEMS

DOUBLE T SHORE (Vertical Class 2)

This is the most stable spot shore, and much preferred to the marginally stable**, T-Shore**.	
Material List:	
Header and Sole	2 - Half Gussets
2 - Posts	2 - Wedge Sets
2 - Double Gussets	One 12"x 24" ply mid- brace

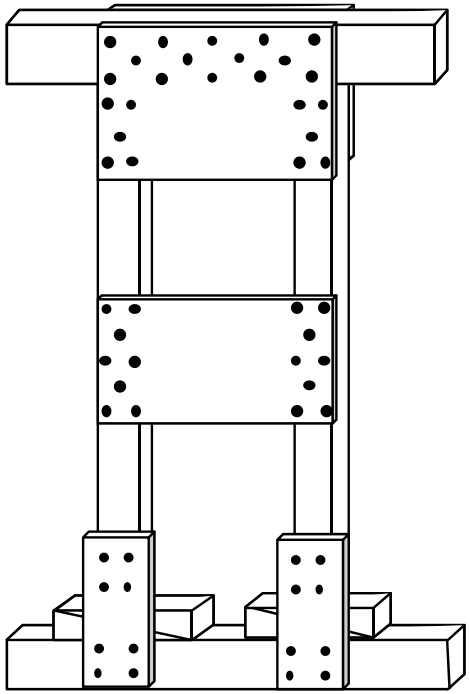

Design Load – based on shore height
16,000lb – 8 ft, 10,000lb – 10ft, 7,000lb – 12ft

2-18

HOW TO CONSTRUCT THE DOUBLE T SHORE

1. Determine overall height of area to be shored and remove least amount of debris required to place the shore.

- The 4x4 post should be 11'-3" maximum long, so the total height of the shore is not more than 12 feet.

2. Measure and cut 4x4 header, sole and post (remember to deduct header, sole and wedge height when cutting post). Header and sole are 3 feet long.
3. Prefabricate header to posts.

- Toe-nail posts to header and make square.
- Place and nail Double Gusset plate on one side of both posts.
- Nail 5-8d to each post and 14-8d to header.
- Flip shore over and place another Double Gusset on other side.

4. Nail mid-height plywood, Double Gusset to one side of posts (8-8d to each post).
5. Place Double T in position, centered under the load.
6. Slide sole plate under Double T and tap 2x4 wedges into position.
7. Check for straightness plus stability, and then tighten wedges.
8. Install bottom Half Gussets and nail 4-8d to each post and sole.
9. Anchor the shore to floor above and sole to floor below, if practical.

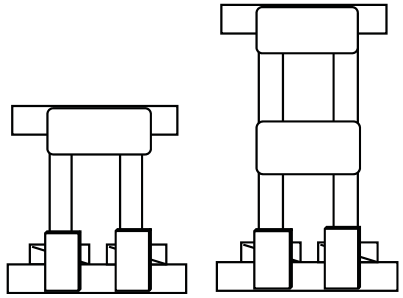

3' to 6' high 6' to 12' high

US&R SHORING OPERATIONS GUIDE
CONSTRUCTING VERTICAL SHORING SYSTEMS

HOW TO CONSTRUCT THE DOUBLE T SHORE

1. Determine overall height of area to be shored and remove least amount of debris required to place the shore.

- The 4x4 post should be 11'-3" maximum long, so the total height of the shore is not more than 12 feet.

2. Measure and cut 4x4 header, sole and post (remember to deduct header, sole and wedge height when cutting post). Header and sole are 3 feet long.
3. Prefabricate header to posts.

- Toe-nail posts to header and make square.
- Place and nail Double Gusset plate on one side of both posts.
- Nail 5-8d to each post and 14-8d to header.
- Flip shore over and place another Double Gusset on other side.

4. Nail mid-height plywood, Double Gusset to one side of posts (8-8d to each post).
5. Place Double T in position, centered under the load.
6. Slide sole plate under Double T and tap 2x4 wedges into position.
7. Check for straightness plus stability, and then tighten wedges.
8. Install bottom Half Gussets and nail 4-8d to each post and sole.
9. Anchor the shore to floor above and sole to floor below, if practical.

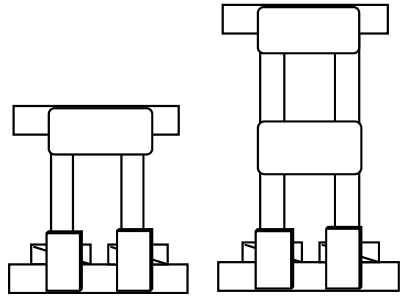

3' to 6' high 6' to 12' high

2-19

2

VERTICAL SHORE (Vertical Class 2)

This shore normally is built in-place in the danger zone. Spot shores should precede the erection of this shore.	
Material List:	
1 Header & 1 Sole	1 -Wedge Set each post
2 or more Posts	2 - 2x6 Diagonals ("X")
Half Gussets – 5 for 3-post, 8 for 4-post, & 11 for 5-post	
Mid-brace (1 x 6 or 6" ply) see Additional Information	

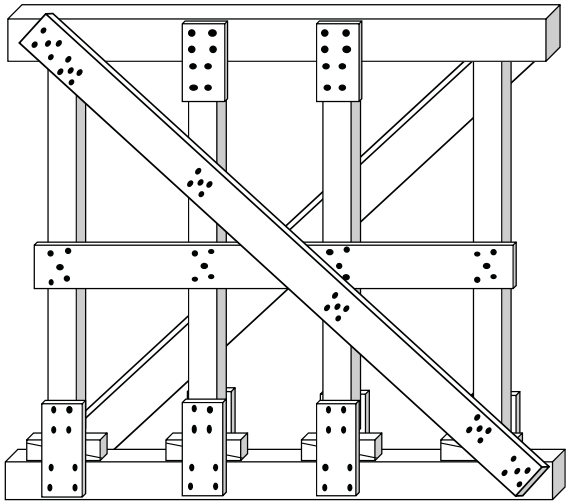

4 – Post Vertical Shore (may have 3 or 5 posts)

Design Load 4 x 4 posts:

Height = 8 feet	8,000 lb each post
Height = 10 feet	5,000 lb each post
Height = 12 feet	3,500 lb each post

Design Load 6 x 6 posts:

Height = 12 feet	20,000 lb each post
Height = 16 feet	12,000 lb each post
Height = 20 feet	7,500 lb each post

US&R SHORING OPERATIONS GUIDE
CONSTRUCTING VERTICAL SHORING SYSTEMS

VERTICAL SHORE (Vertical Class 2)

This shore normally is built in-place in the danger zone. Spot shores should precede the erection of this shore.	
Material List:	
1 Header & 1 Sole	1 -Wedge Set each post
2 or more Posts	2 - 2x6 Diagonals ("X")
Half Gussets – 5 for 3-post, 8 for 4-post, & 11 for 5-post	
Mid-brace (1 x 6 or 6" ply) see Additional Information	

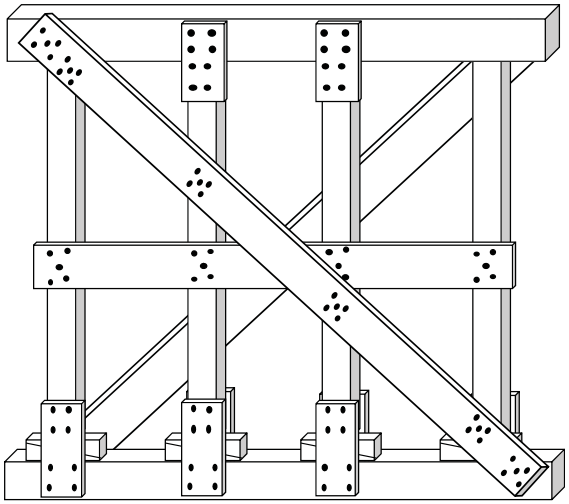

4 – Post Vertical Shore (may have 3 or 5 posts)

Design Load 4 x 4 posts:

Height = 8 feet	8,000 lb each post
Height = 10 feet	5,000 lb each post
Height = 12 feet	3,500 lb each post

Design Load 6 x 6 posts:

Height = 12 feet	20,000 lb each post
Height = 16 feet	12,000 lb each post
Height = 20 feet	7,500 lb each post

2-20

HOW TO CONSTRUCT THE VERTICAL SHORE

1. Survey, install spot shores (if needed), and remove least amount of debris required to place the shore.
2. Lay the sole plate on the floor or ground directly under and in line where header will be installed. Sole plate should be level. Add 3-2x6x18" (foot) under sole at posts for soft soil conditions.
3. Measure and cut the posts to the proper height:

- Place the header on top of the sole plate.
- Place the end of the tape measure on top of the header at both ends and at its middle, to find the distances to the bottom of the structure to be shored. After deducting for wedges, use smallest dimension for all posts. (assumes near-level conditions)

4. If possible, anchor the header to the area that is to be shored, square and in line with the sole plate. Secure it at the lowest point and shim the structural elements down to the header trying to keep it as level as possible.
5. Install the posts between the header and sole plate under each structural element to be supported. 4x4 Posts should be spaced 4 feet on center, maximum.

- Install first two posts 12" from ends of header.
- Toe-nail each post to header and sole, and keep the posts in line & plumb with header and sole plate.

6. Install a set of 2x4 wedges under each post, on top of Sole, and tap them together simultaneously until the posts are tight. Toenail behind the wedges to secure them.
7. Attach the diagonal braces to each side of the vertical shore.

- Mid-point brace, when needed, should be installed prior to the diagonal braces.
- The diag. braces should be long enough to span its entire length and be attached to the sole plate and header and each post.
- If possible, diagonal braces should be installed in a "X" pattern on opposite sides of the system.
- Vertical shoring systems which are very long may require several sets of diagonal braces.

8. Attach half-gussets to one side of header to post, except where diagonal braces attach. Add Half Gussets to each side of each post to sole plate, except where diagonal braces attach (then only one side). Nail with 8-8d. (Also see note 5. On page 2-9)

US&R SHORING OPERATIONS GUIDE
CONSTRUCTING VERTICAL SHORING SYSTEMS

HOW TO CONSTRUCT THE VERTICAL SHORE

1. Survey, install spot shores (if needed), and remove least amount of debris required to place the shore.
2. Lay the sole plate on the floor or ground directly under and in line where header will be installed. Sole plate should be level. Add 3-2x6x18" (foot) under sole at posts for soft soil conditions.
3. Measure and cut the posts to the proper height:

- Place the header on top of the sole plate.
- Place the end of the tape measure on top of the header at both ends and at its middle, to find the distances to the bottom of the structure to be shored. After deducting for wedges, use smallest dimension for all posts. (assumes near-level conditions)

2

4. If possible, anchor the header to the area that is to be shored, square and in line with the sole plate. Secure it at the lowest point and shim the structural elements down to the header trying to keep it as level as possible.
5. Install the posts between the header and sole plate under each structural element to be supported. 4x4 Posts should be spaced 4 feet on center, maximum.

- Install first two posts 12" from ends of header.
- Toe-nail each post to header and sole, and keep the posts in line & plumb with header and sole plate.

6. Install a set of 2x4 wedges under each post, on top of Sole, and tap them together simultaneously until the posts are tight. Toenail behind the wedges to secure them.
7. Attach the diagonal braces to each side of the vertical shore.

- Mid-point brace, when needed, should be installed prior to the diagonal braces.
- The diag. braces should be long enough to span its entire length and be attached to the sole plate and header and each post.
- If possible, diagonal braces should be installed in a "X" pattern on opposite sides of the system.
- Vertical shoring systems which are very long may require several sets of diagonal braces.

8. Attach half-gussets to one side of header to post, except where diagonal braces attach. Add Half Gussets to each side of each post to sole plate, except where diagonal braces attach (then only one side). Nail with 8-8d. (Also see note 5. On page 2-9)

2-21

ADDITIONAL INFORMATION

1. Maximum shore height for 4 x 4 posts: 12 feet.
2. Maximum shore height for 6 x 6 posts: 20 feet.
3. Posts:
   - 4 x 4 minimum.
   - Spacing for 4 x 4 posts: Maximum 4 feet on center.
   - Spacing for 6 x 6 posts: Maximum 5 feet on center.
4. Header and Sole:
   - Same size as posts in most cases.
   - If supported slab is badly fractured concrete or masonry, larger header should be designed.
5. Backing under Sole on Soil:
   - Use 3-2x6x18" under sole centered on each post.
   - May use 2 layers of 18"x18"x 3/4" plywood
6. Wedges: 2x4 for 4x4 posts & 2x6 or 4x6 for 6x6 posts.
7. Half Gussets at bottom:
   - Each side to confine wedges, except where diagonal connects, then only one side.
8. Half Gussets at Top:
   - One side if header is the same size as post, except where diagonal connects.
   - Each side if header is taller than width.
9. Mid-Point Braces:
   - Use 1x6 or 5/8" min plywood x 6", 5-8d to each post.
   - Use if 4 x 4 posts are greater than 8 feet long.
   - Use if 6 x 6 posts are greater than 12 feet long.
10. Diagonal X Braces:
    - 2 x 6 each side of shore (place in X configuration and over mid-brace, one side)
    - 5-16d each end, to header, sole, and posts. May reduce nailing to 3–16d at end posts if space is limited in order to reduce tendency to split post.

US&R SHORING OPERATIONS GUIDE
CONSTRUCTING VERTICAL SHORING SYSTEMS

ADDITIONAL INFORMATION

1. Maximum shore height for 4 x 4 posts: 12 feet.
2. Maximum shore height for 6 x 6 posts: 20 feet.
3. Posts:
   - 4 x 4 minimum.
   - Spacing for 4 x 4 posts: Maximum 4 feet on center.
   - Spacing for 6 x 6 posts: Maximum 5 feet on center.
4. Header and Sole:
   - Same size as posts in most cases.
   - If supported slab is badly fractured concrete or masonry, larger header should be designed.
5. Backing under Sole on Soil:
   - Use 3-2x6x18" under sole centered on each post.
   - May use 2 layers of 18"x18"x 3/4" plywood
6. Wedges: 2x4 for 4x4 posts & 2x6 or 4x6 for 6x6 posts.
7. Half Gussets at bottom:
   - Each side to confine wedges, except where diagonal connects, then only one side.
8. Half Gussets at Top:
   - One side if header is the same size as post, except where diagonal connects.
   - Each side if header is taller than width.
9. Mid-Point Braces:
   - Use 1x6 or 5/8" min plywood x 6", 5-8d to each post.
   - Use if 4 x 4 posts are greater than 8 feet long.
   - Use if 6 x 6 posts are greater than 12 feet long.
10. Diagonal X Braces:
    - 2 x 6 each side of shore (place in X configuration and over mid-brace, one side)
    - 5-16d each end, to header, sole, and posts. May reduce nailing to 3–16d at end posts if space is limited in order to reduce tendency to split post.

2-22

VERTICAL SHORES – ALTERNATE CONFIGURATIONS

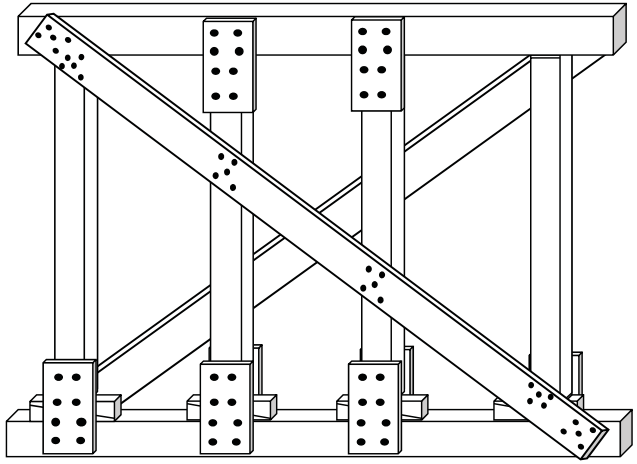

NORMAL LOADING - Less than 9ft high

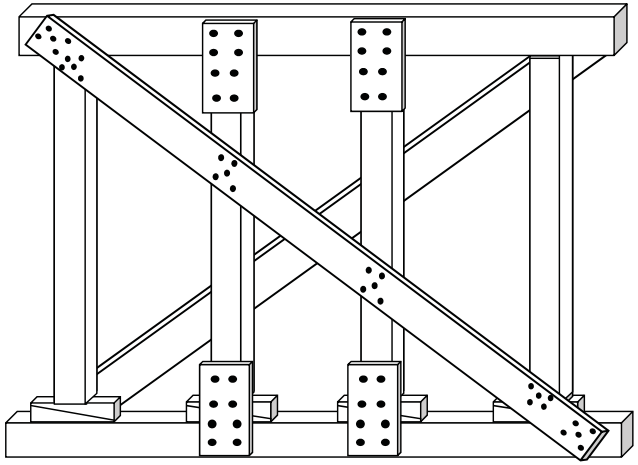

LIGHT FRAME STRUCTURE WITH NO LATERAL LOADING

US&R SHORING OPERATIONS GUIDE
CONSTRUCTING VERTICAL SHORING SYSTEMS

VERTICAL SHORES – ALTERNATE CONFIGURATIONS

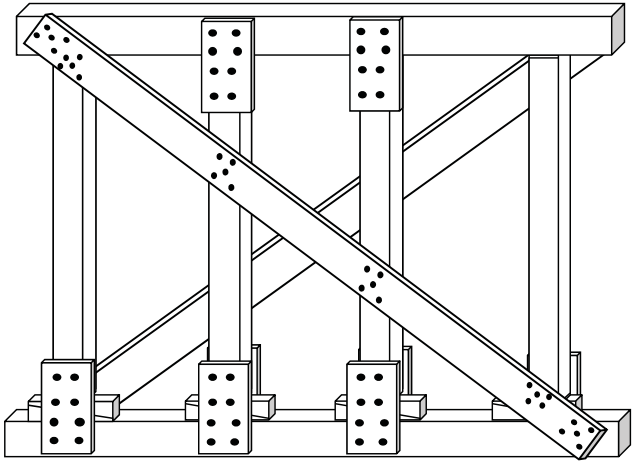

NORMAL LOADING - Less than 9ft high

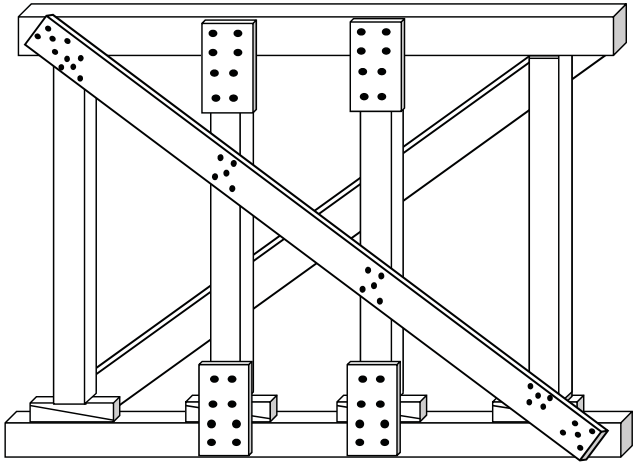

LIGHT FRAME STRUCTURE WITH NO LATERAL LOADING

2-23

2

2-POST VERTICAL SHORE (Vertical/Class 2)

This shore is the same as one side of a laced post. It can be partly pre-fabricated, then assembled in danger area	
Material List: (See Additional Information)	
1 - Header & 1 Sole	2 - Wedge Sets
2 - Posts	4 - Half Gussets
2 x Diagonal Bracing (Max height for shore w/ 4x4 posts is 12ft)	1 for shore up to 6 feet high 2 for shore from 6ft to11 ft 3 for shore from 11ft to 17 ft 4 for shore from 17ft to 20 ft
1x Horizontal Bracing	1 for shore from 6ft to11 ft 2 for shore from 11ft to 17 ft 3 for shore from 17ft to 20 ft

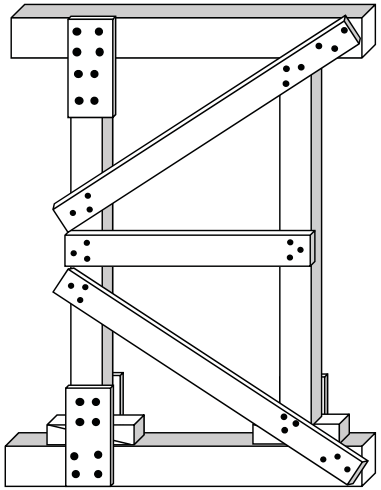

Design Load 4 x 4 posts:

Height = 8 feet	16,000 lb
Height = 10 feet	10,000 lb
Height = 12 feet	7,000 lb

US&R SHORING OPERATIONS GUIDE
CONSTRUCTING VERTICAL SHORING SYSTEMS

2-POST VERTICAL SHORE (Vertical/Class 2)

This shore is the same as one side of a laced post. It can be partly pre-fabricated, then assembled in danger area	
Material List: (See Additional Information)	
1 - Header & 1 Sole	2 - Wedge Sets
2 - Posts	4 - Half Gussets
2 x Diagonal Bracing (Max height for shore w/ 4x4 posts is 12ft)	1 for shore up to 6 feet high 2 for shore from 6ft to11 ft 3 for shore from 11ft to 17 ft 4 for shore from 17ft to 20 ft
1x Horizontal Bracing	1 for shore from 6ft to11 ft 2 for shore from 11ft to 17 ft 3 for shore from 17ft to 20 ft

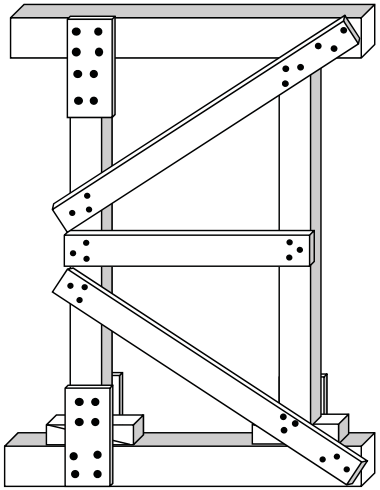

Design Load 4 x 4 posts:

Height = 8 feet	16,000 lb
Height = 10 feet	10,000 lb
Height = 12 feet	7,000 lb

2-24

Design Load 6 x 6 posts:

Height = 12 feet	40,000 lb
Height = 14 feet	29,000 lb
Height = 16 feet	24,000 lb

HOW TO CONSTRUCT THE 2-POST VERTICAL SHORE

1. Determine where to erect the 2-Post Vertical Shore, the condition of the supporting structure and/or ground, and remove least amount of debris required to place the shore.
- If practical, this shore should be partially prefabricated, same as for the Laced Post.
- If using 4x4 posts, space 4 feet, max on center. 6x6 posts may be 5 feet max on center. If access is limited, Post Spacing may be reduced to 3 feet on center.
- May build 2-Post Shore in pairs, to later convert two, single 2-post vertical shores into a Laced Post for better stability.

2. Measure and cut the posts to the proper height. (remember to deduct for header, sole & wedges when cutting posts). Also, cut the mid-brace and diagonals to proper lengths.
- Header shall have a 12 inch overhang each end.
- Toe-nail posts to header as assembly, first step, then make them square with the header.
- Nail Half Gussets at posts to header. Make outside edge of half-gusset flush with outside of posts.
- Nail Mid-Brace to both posts.
- Nail upper 2x4 diagonal to posts and header.

3. Cut the sole and wedges. Sole is same length as header.
4. Place 2-Post Shore in position, centered under the load.
5. Slide sole plate under shore and tap wedges into position.
6. Check for straightness plus stability, then tighten wedges.
7. Install lower diagonal and half gussets and nail properly.
8. Backing under Sole on Soil:
- Use 3-2x6x18" under sole centered on each post. (or 2-18"x18"x 3/4" plywood)

9. Anchor the shore to floor above and sole to floor below, if practical.

US&R SHORING OPERATIONS GUIDE
CONSTRUCTING VERTICAL SHORING SYSTEMS

Design Load 6 x 6 posts:

Height = 12 feet	40,000 lb
Height = 14 feet	29,000 lb
Height = 16 feet	24,000 lb

HOW TO CONSTRUCT THE 2-POST VERTICAL SHORE

1. Determine where to erect the 2-Post Vertical Shore, the condition of the supporting structure and/or ground, and remove least amount of debris required to place the shore.
- If practical, this shore should be partially prefabricated, same as for the Laced Post.
- If using 4x4 posts, space 4 feet, max on center. 6x6 posts may be 5 feet max on center. If access is limited, Post Spacing may be reduced to 3 feet on center.
- May build 2-Post Shore in pairs, to later convert two, single 2-post vertical shores into a Laced Post for better stability.

2. Measure and cut the posts to the proper height. (remember to deduct for header, sole & wedges when cutting posts). Also, cut the mid-brace and diagonals to proper lengths.
- Header shall have a 12 inch overhang each end.
- Toe-nail posts to header as assembly, first step, then make them square with the header.
- Nail Half Gussets at posts to header. Make outside edge of half-gusset flush with outside of posts.
- Nail Mid-Brace to both posts.
- Nail upper 2x4 diagonal to posts and header.

3. Cut the sole and wedges. Sole is same length as header.
4. Place 2-Post Shore in position, centered under the load.
5. Slide sole plate under shore and tap wedges into position.
6. Check for straightness plus stability, then tighten wedges.
7. Install lower diagonal and half gussets and nail properly.
8. Backing under Sole on Soil:
- Use 3-2x6x18" under sole centered on each post. (or 2-18"x18"x 3/4" plywood)

9. Anchor the shore to floor above and sole to floor below, if practical.

2-25

ADDITIONAL INFORMATION – 2-Post Shore

1. Maximum shore height for 4 x 4 posts: 12 feet.
2. Maximum shore height for 6 x 6 posts: 20 feet.
3. Posts: 4 x 4 or 6 x 6.
- Spacing for 4 x 4 posts: Maximum 4 feet on center.
- Spacing for 6 x 6 posts: Maximum 5 feet on center.
4. Header and Sole:
- Same size as posts in most cases.
- If supported slab is badly fractured concrete or masonry, one needs to engineer larger sized header.
5. Half Gussets at Bottom:
- Each side to confine wedges, except where diagonal connects, then only one side.(2x4 wedges at 4x4 posts; 2x6 or 4x6 at 6x6)
6. Half Gussets at Top:
- One side if header same size as post, except where diagonal connects.
- Each side if header is taller than width.
7. Diagonal Braces: (Max. length is 7'-6")
- 2 x 4 for 4 x 4 posts.
- 2 x 6 for 6 x 6 posts.
8. Mid-Point Braces: (see below for configurations).
- 2 x 4 for 4 x 4 posts & 2 x 6 for 6 x 6 posts.

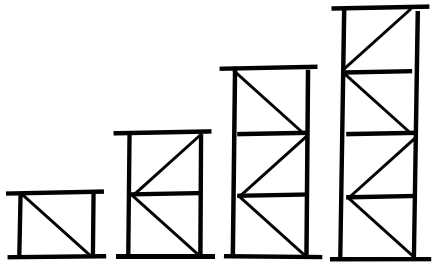

4' to 6' high 6' to 11' 11' to 17' 17' to 20' high

Note: Maximum height using 4 x 4 posts is 12 feet

US&R SHORING OPERATIONS GUIDE
CONSTRUCTING VERTICAL SHORING SYSTEMS

ADDITIONAL INFORMATION – 2-Post Shore

1. Maximum shore height for 4 x 4 posts: 12 feet.
2. Maximum shore height for 6 x 6 posts: 20 feet.
3. Posts: 4 x 4 or 6 x 6.
- Spacing for 4 x 4 posts: Maximum 4 feet on center.
- Spacing for 6 x 6 posts: Maximum 5 feet on center.
4. Header and Sole:
- Same size as posts in most cases.
- If supported slab is badly fractured concrete or masonry, one needs to engineer larger sized header.
5. Half Gussets at Bottom:
- Each side to confine wedges, except where diagonal connects, then only one side.(2x4 wedges at 4x4 posts; 2x6 or 4x6 at 6x6)
6. Half Gussets at Top:
- One side if header same size as post, except where diagonal connects.
- Each side if header is taller than width.
7. Diagonal Braces: (Max. length is 7'-6")
- 2 x 4 for 4 x 4 posts.
- 2 x 6 for 6 x 6 posts.
8. Mid-Point Braces: (see below for configurations).
- 2 x 4 for 4 x 4 posts & 2 x 6 for 6 x 6 posts.

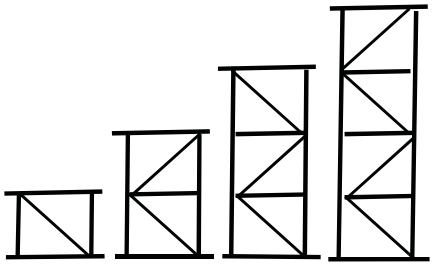

4' to 6' high 6' to 11' 11' to 17' 17' to 20' high

Note: Maximum height using 4 x 4 posts is 12 feet

2-26

This Page Left Blank

US&R SHORING OPERATIONS GUIDE
CONSTRUCTING VERTICAL SHORING SYSTEMS

This Page Left Blank

2

2-27

LACED POST SHORE (Vertical/Class 3)

High Capacity four post system. It is constructed similar to a pair of 2-post vertical shores, but laced together.	
Material List: (See ADDITIONAL INFORMATION)	
2 each Header & Sole	8 Half gussets
4 Posts	4 Wedge Sets
Diagonal and Horizontal Bracing (number for each)	4 for shore up to 6 feet high 8 for shore from 6ft to11 ft 12 for shore from 11ft to 17 ft 16 for shore from 17ft to 20 ft

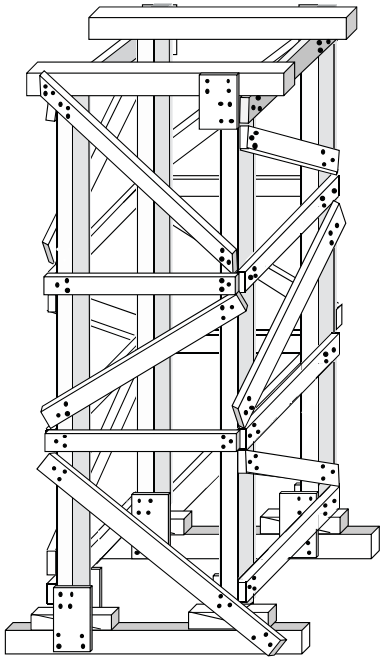

DESIGN LOAD: 4x4 Posts = 32,000lb 6x6 Posts = 80,000lb

US&R SHORING OPERATIONS GUIDE
CONSTRUCTING VERTICAL SHORING SYSTEMS

LACED POST SHORE (Vertical/Class 3)

High Capacity four post system. It is constructed similar to a pair of 2-post vertical shores, but laced together.	
Material List: (See ADDITIONAL INFORMATION)	
2 each Header & Sole	8 Half gussets
4 Posts	4 Wedge Sets
Diagonal and Horizontal Bracing (number for each)	4 for shore up to 6 feet high 8 for shore from 6ft to11 ft 12 for shore from 11ft to 17 ft 16 for shore from 17ft to 20 ft

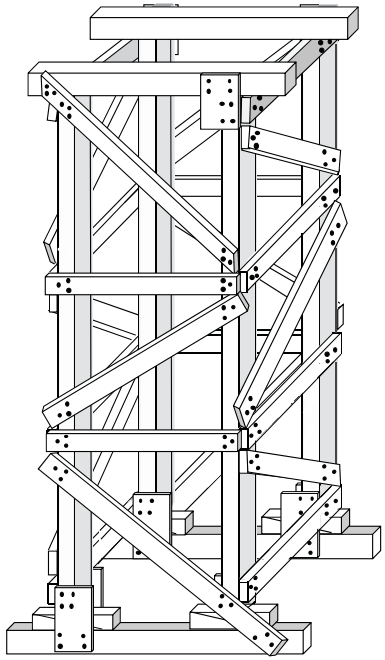

DESIGN LOAD: 4x4 Posts = 32,000lb 6x6 Posts = 80,000lb

2-28

HOW TO CONSTRUCT THE LACED POST SHORE

1. Survey, install spot shores (if needed), and remove the least amount of debris required to place the shore.
2. Determine the length and height of the shore.

- Cut the header and sole plates 24 inches longer than width of the shore to allow for 12 inch overhangs.
- Cut the posts to allow for header, sole and wedges.

3. Nail posts to header with toenails and keep them square.

- Check by comparing diagonal, full-height distances (outside top-right to outside bottom-left, should be same as outside top-left to outside-bottom right).
- If posts are not straight, set both with bow-out.
- Nail a half-gusset to one post/header joint, then nail the midpoint brace (braces) in position. Re-check diagonal measurement and pull-in any bow-out.

4. Measure and install the top diagonal, so it overlaps and ties into the header. Use proper nail pattern.
5. Measure and install mid-diagonals, if required by height.
6. Fabricate the second section, using first as template.
7. Have the horizontal tie-in braces precut for ease of assembly.
8. Bring both sections and the sole plates into position and place the prefabricated units on top of the sole plates.
9. Install wedges under each post, and check post spacing.
10. Nail the horizontal braces to the two sections on both sides. Start with the lowest mid-brace and work up.
11. Measure for all the diagonals, and configure in K or parallel layout, as best works for the situation.

- Avoid intersecting too many diagonals on a post at a single location.

12. At the sole plate, make sure the bottom diagonal extends past the post and nails into the sole plate.

- Place a half-gusset plate onto the opposite side of this post and to each side of the other posts at the base. (Outside edge flush)

13. Anchor the shore to the ceiling and floor, if practical.
14. Make sure all wedges are snug and the proper nail patterns were used.

US&R SHORING OPERATIONS GUIDE
CONSTRUCTING VERTICAL SHORING SYSTEMS

HOW TO CONSTRUCT THE LACED POST SHORE

1. Survey, install spot shores (if needed), and remove the least amount of debris required to place the shore.
2. Determine the length and height of the shore.

- Cut the header and sole plates 24 inches longer than width of the shore to allow for 12 inch overhangs.
- Cut the posts to allow for header, sole and wedges.

3. Nail posts to header with toenails and keep them square.

- Check by comparing diagonal, full-height distances (outside top-right to outside bottom-left, should be same as outside top-left to outside-bottom right).
- If posts are not straight, set both with bow-out.
- Nail a half-gusset to one post/header joint, then nail the midpoint brace (braces) in position. Re-check diagonal measurement and pull-in any bow-out.

4. Measure and install the top diagonal, so it overlaps and ties into the header. Use proper nail pattern.
5. Measure and install mid-diagonals, if required by height.
6. Fabricate the second section, using first as template.
7. Have the horizontal tie-in braces precut for ease of assembly.
8. Bring both sections and the sole plates into position and place the prefabricated units on top of the sole plates.
9. Install wedges under each post, and check post spacing.
10. Nail the horizontal braces to the two sections on both sides. Start with the lowest mid-brace and work up.
11. Measure for all the diagonals, and configure in K or parallel layout, as best works for the situation.

- Avoid intersecting too many diagonals on a post at a single location.

12. At the sole plate, make sure the bottom diagonal extends past the post and nails into the sole plate.

- Place a half-gusset plate onto the opposite side of this post and to each side of the other posts at the base. (Outside edge flush)

13. Anchor the shore to the ceiling and floor, if practical.
14. Make sure all wedges are snug and the proper nail patterns were used.

2-29

2

ADDITIONAL INFORMATION – LACED POST SHORE

1. Maximum shore height for 4 x 4 posts: 17 feet.
2. Maximum shore height for 6 x 6 posts: 20 feet.
3. Posts: Same spacing each way.
   - 4 x 4 posts: Maximum 4 feet on center.
   - 6 x 6 posts: Maximum 5 feet on center.
4. Header and Sole: same size as posts.
5. Half Gussets at Top:
   - One side (exterior) where no diagonal.
6. Half Gussets at Bottom:
   - One side (interior) at diagonals.
   - Each side where no diagonals.
7. Diagonal Braces:
   - 2 x 4 for 4 x 4 posts.
   - 2 x 6 for 6 x 6 posts.
8. Mid-Point Braces and Horizontal Struts: 2 x 4, 2 x 6 in configuration shown below. (equally spaced)

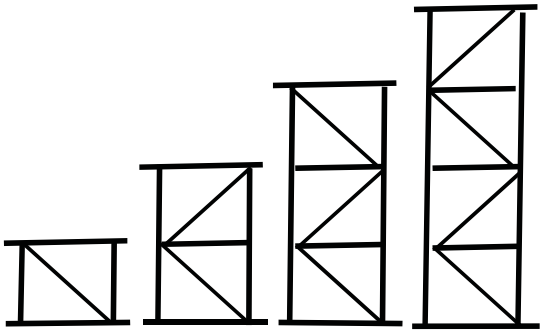

4' to 6' high 6' to 11' 11' to 17' 17' to 20' high

Note: Maximum height using 4 x 4 posts is 17 feet

US&R SHORING OPERATIONS GUIDE
CONSTRUCTING VERTICAL SHORING SYSTEMS

ADDITIONAL INFORMATION – LACED POST SHORE

1. Maximum shore height for 4 x 4 posts: 17 feet.
2. Maximum shore height for 6 x 6 posts: 20 feet.
3. Posts: Same spacing each way.
   - 4 x 4 posts: Maximum 4 feet on center.
   - 6 x 6 posts: Maximum 5 feet on center.
4. Header and Sole: same size as posts.
5. Half Gussets at Top:
   - One side (exterior) where no diagonal.
6. Half Gussets at Bottom:
   - One side (interior) at diagonals.
   - Each side where no diagonals.
7. Diagonal Braces:
   - 2 x 4 for 4 x 4 posts.
   - 2 x 6 for 6 x 6 posts.
8. Mid-Point Braces and Horizontal Struts: 2 x 4, 2 x 6 in configuration shown below. (equally spaced)

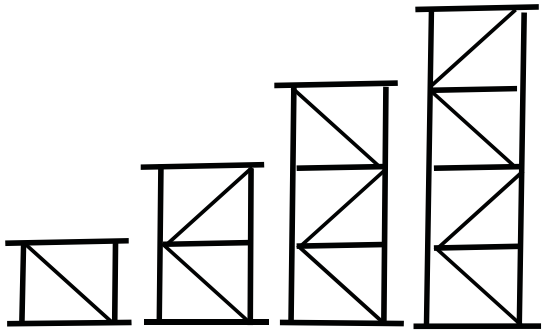

4' to 6' high 6' to 11' 11' to 17' 17' to 20' high

Note: Maximum height using 4 x 4 posts is 17 feet

2-30

MOST COMMON CONFIGURATION – LACED POST SHORE

Material List: (for 6ft to 11ft high)	
2 each Header & Sole	8 Half gussets
4 Posts	4 Wedge Sets
Diagonal and Horizontal Bracing (number for each)	4 for shore up to 6 feet high 8 for shore from 6ft to11 ft

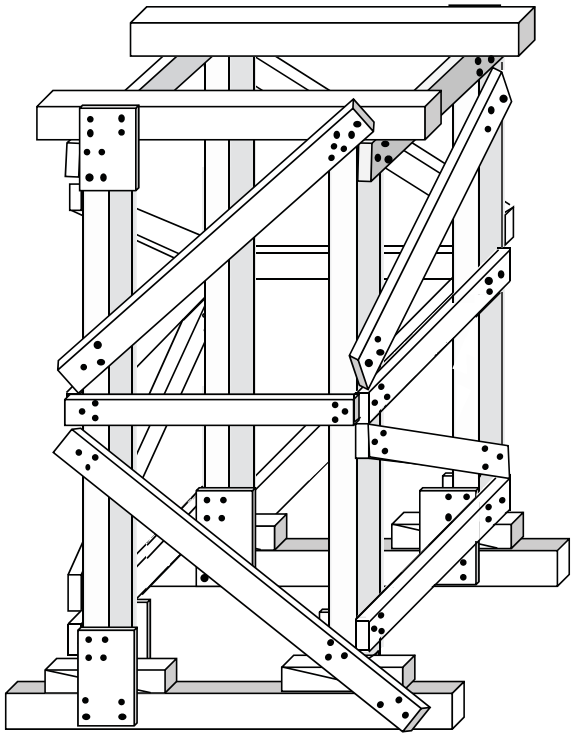

DESIGN LOAD: 4x4 Posts = 32,000lb 6x6 Posts = 80,000lb

US&R SHORING OPERATIONS GUIDE
CONSTRUCTING VERTICAL SHORING SYSTEMS

MOST COMMON CONFIGURATION – LACED POST SHORE

Material List: (for 6ft to 11ft high)	
2 each Header & Sole	8 Half gussets
4 Posts	4 Wedge Sets
Diagonal and Horizontal Bracing (number for each)	4 for shore up to 6 feet high 8 for shore from 6ft to11 ft

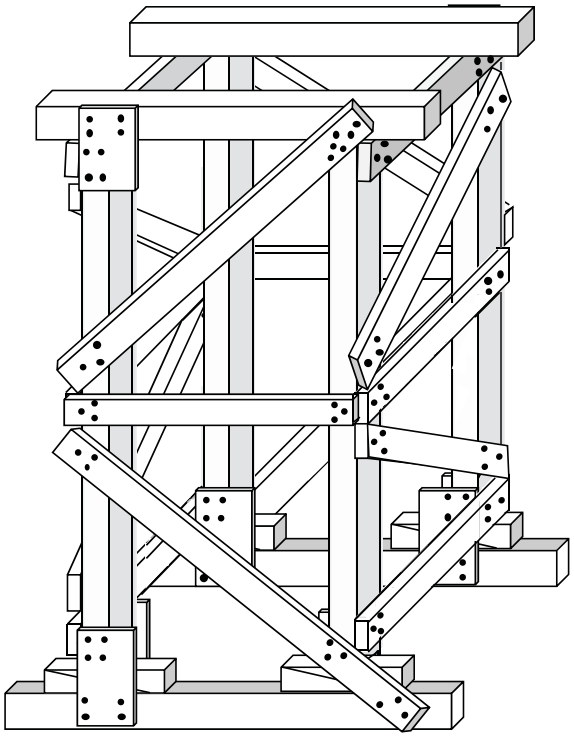

DESIGN LOAD: 4x4 Posts = 32,000lb 6x6 Posts = 80,000lb

2

2-31

US&R SHORING OPERATIONS GUIDE
CONSTRUCTING VERTICAL SHORING SYSTEMS

2' x4' PLYWOOD LACED POST (Vertical/Class 3)

High Capacity four post system, similar to Std. Laced Post, but laced together with plywood, & lighter /faster.	
Material List:	
2- each, Header & Sole	8- Half gussets, 2 Dbl gussets
4 - Posts	4 - Wedge Sets
8" x 48" top/bottom plywood braces	Use 4 for all heights
24" x 24" mid-braces & 24" x 48" mid-braces	Use 1 set up to 9ft Use 2 sets from 9ft to 13ft

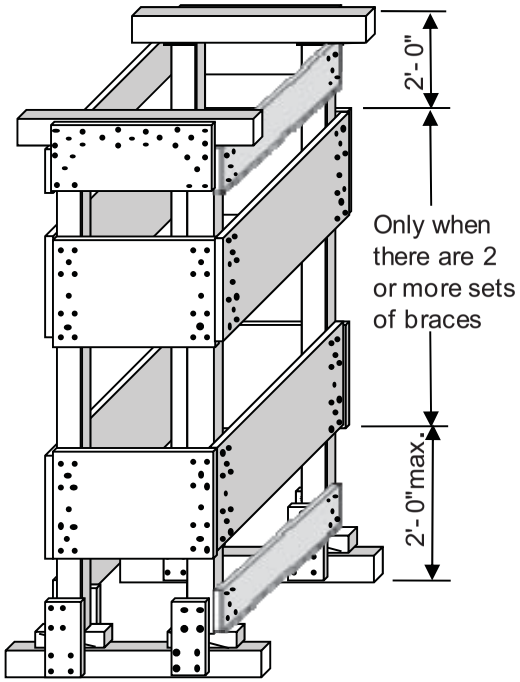

Design Load: 4 x 4 posts =32,000 lb 6 x 6 posts = 80,000 lb

US&R SHORING OPERATIONS GUIDE
CONSTRUCTING VERTICAL SHORING SYSTEMS

2' x4' PLYWOOD LACED POST (Vertical/Class 3)

High Capacity four post system, similar to Std. Laced Post, but laced together with plywood, & lighter /faster.	
Material List:	
2- each, Header & Sole	8- Half gussets, 2 Dbl gussets
4 - Posts	4 - Wedge Sets
8" x 48" top/bottom plywood braces	Use 4 for all heights
24" x 24" mid-braces & 24" x 48" mid-braces	Use 1 set up to 9ft Use 2 sets from 9ft to 13ft

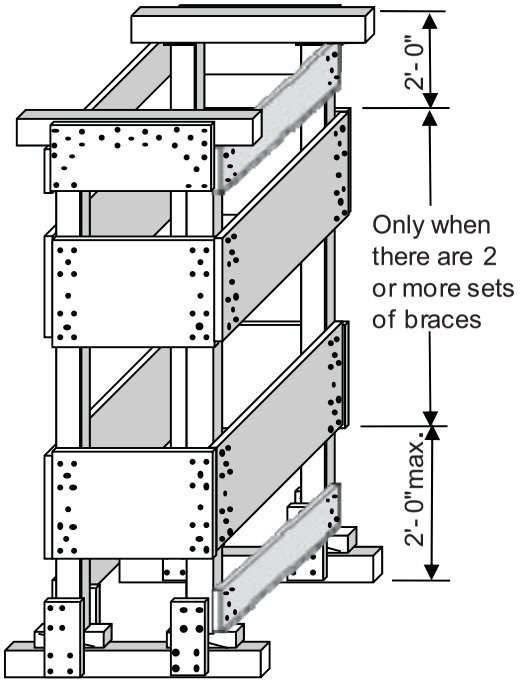

Design Load: 4 x 4 posts =32,000 lb 6 x 6 posts = 80,000 lb

2-32

HOW TO CONSTRUCT THE 2' X 4' PLY LACED POST

1. Survey, install spot shores (if needed), and remove least amount of debris required to place the shore.
2. Determine the height of the shore.

- Cut the header and sole plates to 4 feet in length. (12" O.hangs)

3. Nail posts to header with toenails and keep them square.

- Check by comparing diagonal, full-height distances (outside top-right to outside bottom-left, should be same as outside top-left to outside-bottom right).
- If posts are not straight, set both with bow-out.
- Nail a double gusset: header to both posts.
- Nail the plywood mid braces in position. Re-check diagonal measurement, & if posts bow-out, pull them in with the plywood braces. Use proper nail pattern.

4. Fabricate the second section, using first as template.
5. Have the plywood braces precut for ease of assembly.
6. Bring both sections and the sole plates into position and place the prefabricated units on top of the sole plates.

- Make sure that the prefabricated units are spaced 4 foot out to out, to allow for 4 ft plywood braces.

7. Install wedges under each post, and check post spacing.
8. Nail the plywood braces to the two sections on both sides (start with lower ones and climb up).
9. Nail the top and bottom plywood braces in place.

- Place a half-gusset plate on each side of each post to sole, with outside edge of gusset flush w/ post outside face.

10. Anchor the shore to the ceiling and floor, if practical.
11. Make sure all wedges are snug and the proper nail patterns were used.

US&R SHORING OPERATIONS GUIDE
CONSTRUCTING VERTICAL SHORING SYSTEMS

HOW TO CONSTRUCT THE 2' X 4' PLY LACED POST

1. Survey, install spot shores (if needed), and remove least amount of debris required to place the shore.
2. Determine the height of the shore.

- Cut the header and sole plates to 4 feet in length. (12" O.hangs)

3. Nail posts to header with toenails and keep them square.

- Check by comparing diagonal, full-height distances (outside top-right to outside bottom-left, should be same as outside top-left to outside-bottom right).
- If posts are not straight, set both with bow-out.
- Nail a double gusset: header to both posts.
- Nail the plywood mid braces in position. Re-check diagonal measurement, & if posts bow-out, pull them in with the plywood braces. Use proper nail pattern.

4. Fabricate the second section, using first as template.
5. Have the plywood braces precut for ease of assembly.
6. Bring both sections and the sole plates into position and place the prefabricated units on top of the sole plates.

- Make sure that the prefabricated units are spaced 4 foot out to out, to allow for 4 ft plywood braces.

7. Install wedges under each post, and check post spacing.
8. Nail the plywood braces to the two sections on both sides (start with lower ones and climb up).
9. Nail the top and bottom plywood braces in place.

- Place a half-gusset plate on each side of each post to sole, with outside edge of gusset flush w/ post outside face.

10. Anchor the shore to the ceiling and floor, if practical.
11. Make sure all wedges are snug and the proper nail patterns were used.

2

2-33

ADDITIONAL INFORMATION - 2'x4' Plywood Laced Post

1. Maximum shore height for 4 x 4 posts: 13 feet.
2. Maximum shore height for 6 x 6 posts: 13 feet.
3. Posts: 4 x 4 and 6 x 6 are spaced the same.

- Space 2 foot x 4 foot out to out.

4. Header and Sole: same size as posts.
5. Double gusset on outside at top, header to both posts.
6. Half Gussets, each side at each post at bottom.
7. Plywood top and bottom braces : 8" x 48" plywood.
8. Plywood middle braces: 24" x 24", 24" x 48" plywood.

- Distance from top or bottom of shore to nearest middle brace for 9 ft to 13 ft heights shall be 2'-0" maximum.

9. All plywood may be 5/8" or 3/4" (or OSB for dry conditions).
10. Plywood bracing configuration for various heights is shown below:

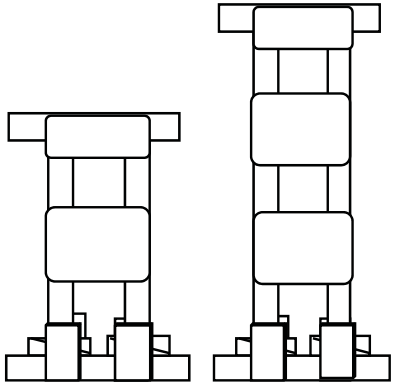

4' to 9' high 9' to 13' high

US&R SHORING OPERATIONS GUIDE
CONSTRUCTING VERTICAL SHORING SYSTEMS

ADDITIONAL INFORMATION - 2'x4' Plywood Laced Post

1. Maximum shore height for 4 x 4 posts: 13 feet.
2. Maximum shore height for 6 x 6 posts: 13 feet.
3. Posts: 4 x 4 and 6 x 6 are spaced the same.

- Space 2 foot x 4 foot out to out.

4. Header and Sole: same size as posts.
5. Double gusset on outside at top, header to both posts.
6. Half Gussets, each side at each post at bottom.
7. Plywood top and bottom braces : 8" x 48" plywood.
8. Plywood middle braces: 24" x 24", 24" x 48" plywood.

- Distance from top or bottom of shore to nearest middle brace for 9 ft to 13 ft heights shall be 2'-0" maximum.

9. All plywood may be 5/8" or 3/4" (or OSB for dry conditions).
10. Plywood bracing configuration for various heights is shown below:

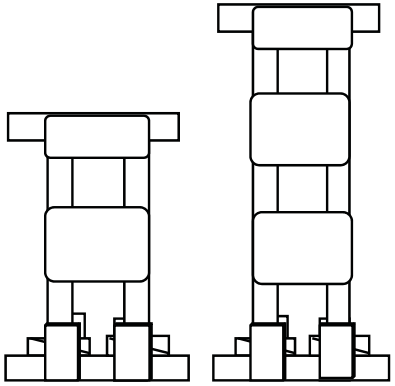

4' to 9' high 9' to 13' high

2-34

4' x4' PLYWOOD LACED POST (Vertical/Class 3)

High Capacity four post system, similar to standard Laced Post, but braced together with plywood.	
Material List:	
2- each Header & Sole	12 - Half gussets
4 – Posts	4 - Wedge Sets
8" x 48" top/bottom braces	Use 4 for all heights
24" x 48" ply mid-braces	Use 4 up to 9ft Use 8 from 9ft to 13ft Use 12 from 13ft to 17ft

2

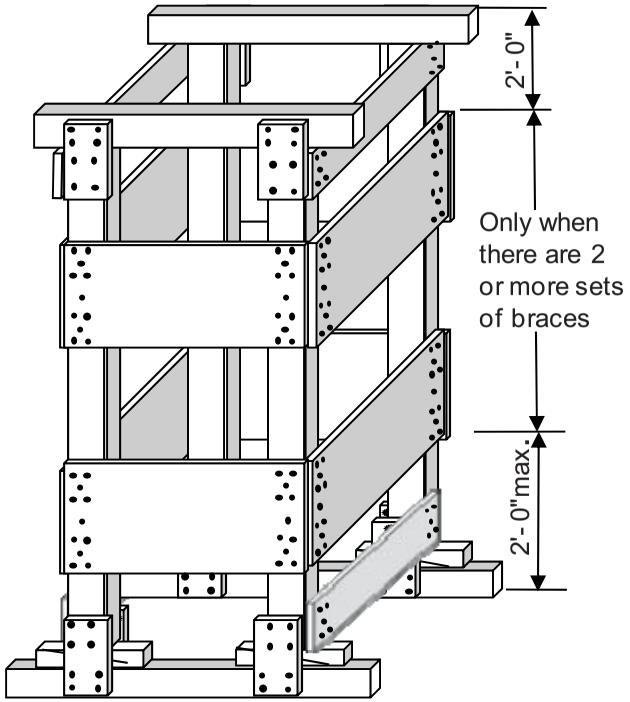

Design Load: 4 x 4 posts =32,000 lb 6 x 6 posts = 80,000 lb

US&R SHORING OPERATIONS GUIDE
CONSTRUCTING VERTICAL SHORING SYSTEMS

4' x4' PLYWOOD LACED POST (Vertical/Class 3)

High Capacity four post system, similar to standard Laced Post, but braced together with plywood.	
Material List:	
2- each Header & Sole	12 - Half gussets
4 – Posts	4 - Wedge Sets
8" x 48" top/bottom braces	Use 4 for all heights
24" x 48" ply mid-braces	Use 4 up to 9ft Use 8 from 9ft to 13ft Use 12 from 13ft to 17ft

2

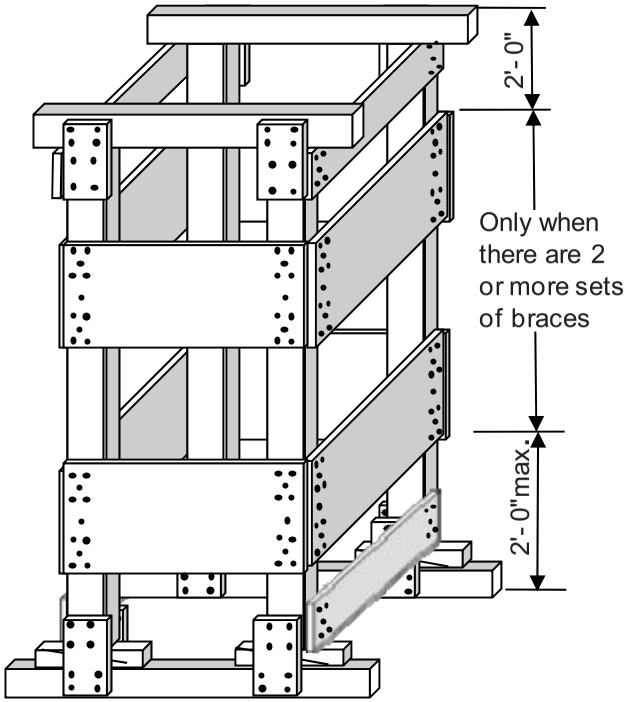

Design Load: 4 x 4 posts =32,000 lb 6 x 6 posts = 80,000 lb

2-35

HOW TO CONSTRUCT THE 4' X 4' PLY LACED POST

1. Survey, install spot shores (if needed), and remove least amount of debris required to place the shore.
2. Determine the height and width of the shore.

- Cut the header and sole plates to 6 feet in length.(12" O-hangs)

3. Nail posts to header with toenails and keep them square.

- Check by comparing diagonal, full-height distances (outside top-right to outside bottom-left, should be same as outside top-left to outside-bottom right).
- If posts are not straight, set both with bow-out.
- Nail a half gusset from header to both posts.
- Nail the plywood mid-braces in position. Re-check diagonal measurement, & if posts bow-out, pull them in with the plywood braces. Use proper nail pattern.

4. Fabricate the second section, using first as template.
5. Have the plywood braces precut for ease of assembly.
6. Bring both sections and the sole plates into position and place the prefabricated units on top of the sole plates.

- Make sure that the prefabricated units are spaced 4 foot out to out, to allow for 4 ft plywood braces.

7. Install wedges under each post, and check post spacing.
8. Nail the plywood braces to the two sections on both sides (start with lower ones and climb up).
9. Nail the top and bottom plywood braces in place.

- Place a half-gusset plate on each side of each post to sole, with outside edge of gusset flush w/ post outside face.

10. Anchor the shore to the ceiling and floor, if practical.
11. Make sure all wedges are snug and the proper nail patterns were used.

US&R SHORING OPERATIONS GUIDE
CONSTRUCTING VERTICAL SHORING SYSTEMS

HOW TO CONSTRUCT THE 4' X 4' PLY LACED POST

1. Survey, install spot shores (if needed), and remove least amount of debris required to place the shore.
2. Determine the height and width of the shore.

- Cut the header and sole plates to 6 feet in length.(12" O-hangs)

3. Nail posts to header with toenails and keep them square.

- Check by comparing diagonal, full-height distances (outside top-right to outside bottom-left, should be same as outside top-left to outside-bottom right).
- If posts are not straight, set both with bow-out.
- Nail a half gusset from header to both posts.
- Nail the plywood mid-braces in position. Re-check diagonal measurement, & if posts bow-out, pull them in with the plywood braces. Use proper nail pattern.

4. Fabricate the second section, using first as template.
5. Have the plywood braces precut for ease of assembly.
6. Bring both sections and the sole plates into position and place the prefabricated units on top of the sole plates.

- Make sure that the prefabricated units are spaced 4 foot out to out, to allow for 4 ft plywood braces.

7. Install wedges under each post, and check post spacing.
8. Nail the plywood braces to the two sections on both sides (start with lower ones and climb up).
9. Nail the top and bottom plywood braces in place.

- Place a half-gusset plate on each side of each post to sole, with outside edge of gusset flush w/ post outside face.

10. Anchor the shore to the ceiling and floor, if practical.
11. Make sure all wedges are snug and the proper nail patterns were used.

2-36

ADDITIONAL INFORMATION – 4'x4' Plywood Laced Post

1. Maximum shore height for 4 x 4 posts: 17 feet.
2. Maximum shore height for 6 x 6 posts: 17 feet.
3. Posts: 4 x 4 and 6 x 6 are spaced the same.

- Space 4 foot x 4 foot out to out (to match plywood).

4. Header and Sole: same size as posts.
5. Half Gusset on outside at top for each post.
6. Half Gussets each side each post at bottom.
7. Plywood top and bottom braces : 8" x 48" plywood.
8. Plywood middle braces: 24" x 48" plywood.

- Distance from top or bottom of shore to nearest middle brace for 9 ft to 17 ft heights shall be 2'-0" maximum.
- There shall be a middle brace placed, centered at the half-height of the shore for 13 ft to 17 ft heights.

9. All plywood may be 5/8" or 3/4" (or OSB for dry conditions).
10. Plywood bracing configuration for various heights is shown below:

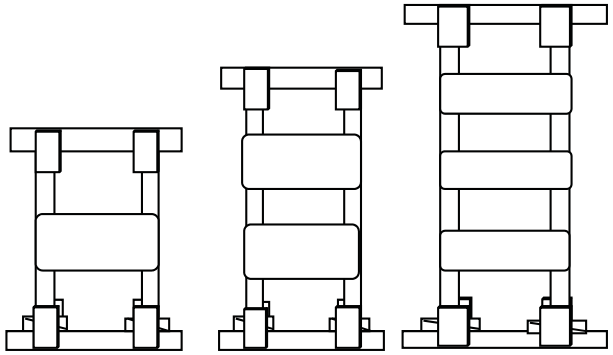

4' to 9' high 9' to 13' 13' to 17' high

US&R SHORING OPERATIONS GUIDE
CONSTRUCTING VERTICAL SHORING SYSTEMS

ADDITIONAL INFORMATION – 4'x4' Plywood Laced Post

1. Maximum shore height for 4 x 4 posts: 17 feet.
2. Maximum shore height for 6 x 6 posts: 17 feet.
3. Posts: 4 x 4 and 6 x 6 are spaced the same.

- Space 4 foot x 4 foot out to out (to match plywood).

4. Header and Sole: same size as posts.
5. Half Gusset on outside at top for each post.
6. Half Gussets each side each post at bottom.
7. Plywood top and bottom braces : 8" x 48" plywood.
8. Plywood middle braces: 24" x 48" plywood.

- Distance from top or bottom of shore to nearest middle brace for 9 ft to 17 ft heights shall be 2'-0" maximum.
- There shall be a middle brace placed, centered at the half-height of the shore for 13 ft to 17 ft heights.

9. All plywood may be 5/8" or 3/4" (or OSB for dry conditions).
10. Plywood bracing configuration for various heights is shown below:

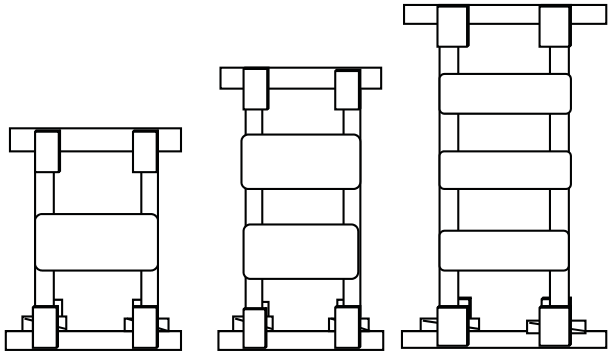

4' to 9' high 9' to 13' 13' to 17' high

2-37

SLOPED FLOOR SHORE–TYPE 2 (Vertical/Class 3)

Built in pairs similar to a laced post shore. Used to support damaged and sloped, concrete floors that **are still connected** to remaining structure. (hinging slabs)	
Material List: (for a pair of shores)	
2 - Headers & Soles	8 - Half Gussets
4 Posts	4- 2x cleats x 18" long, 11-16d
4 - Diagonal Braces (1 each side each shore)	
Anchor Sole w/ 4-1/2 x 8 drill-in anchors into concrete or Sole Anchor from 4 x 4 / 6 x 6 w/ 4 - 1"dia. X 36"pickets.	
Bracing between shores: see bottom of Pg 2-40	

Max. Slope = 45 deg.
See Note 3, Pg 2-41

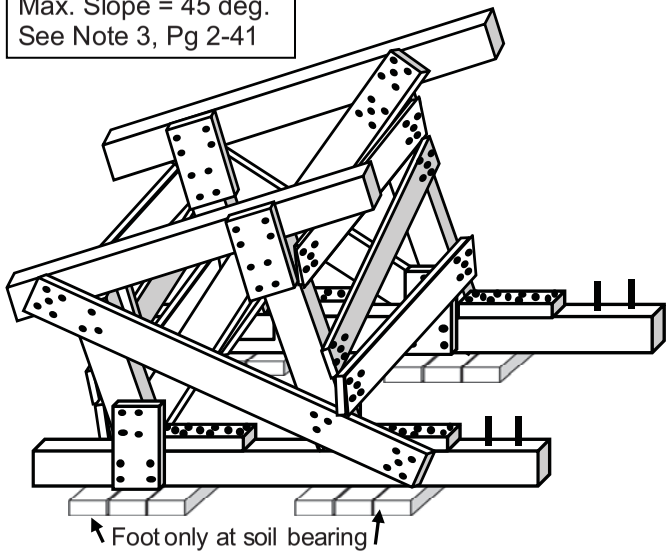

Design Load (depends on slope): 4x4 Posts = 24,000lb Max.
(Consult Structures Specialist) 6x6 Posts = 60,000lb Max.

US&R SHORING OPERATIONS GUIDE
CONSTRUCTING VERTICAL SHORING SYSTEMS

SLOPED FLOOR SHORE–TYPE 2 (Vertical/Class 3)

Built in pairs similar to a laced post shore. Used to support damaged and sloped, concrete floors that **are still connected** to remaining structure. (hinging slabs)	
Material List: (for a pair of shores)	
2 - Headers & Soles	8 - Half Gussets
4 Posts	4- 2x cleats x 18" long, 11-16d
4 - Diagonal Braces (1 each side each shore)	
Anchor Sole w/ 4-1/2 x 8 drill-in anchors into concrete or Sole Anchor from 4 x 4 / 6 x 6 w/ 4 - 1"dia. X 36"pickets.	
Bracing between shores: see bottom of Pg 2-40	

Max. Slope = 45 deg.
See Note 3, Pg 2-41

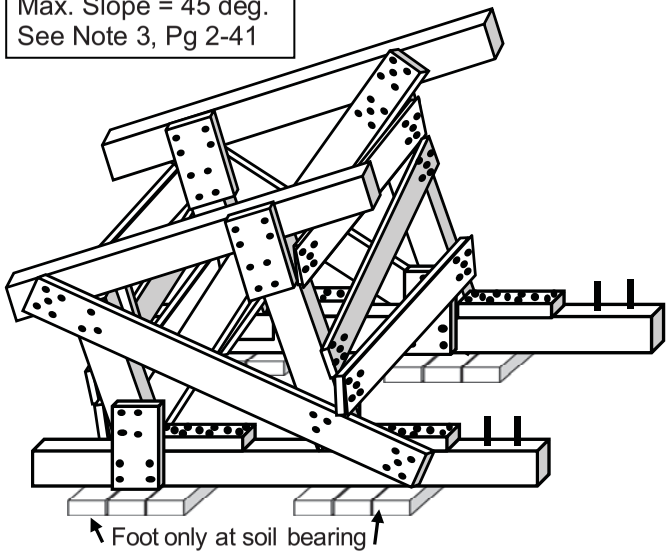

Design Load (depends on slope): 4x4 Posts = 24,000lb Max.
(Consult Structures Specialist) 6x6 Posts = 60,000lb Max.

2-38

HOW TO CONSTRUCT SLOPED FLOOR SHORE–TYPE 2
(May be constructed on Paving or on Soil)

1. Survey, install spot shores (if needed), and remove least amount of debris required to place the shore.
2. Determine length and width of shore and post locations.
- Header overhang is 12 inch maximum. Sole must extend 30" longer from front of longer post, to allow for cleat & anchors.
- Shore is built as pair of 2-post sections, like laced post.
- The 2 sections should be placed from 4 ft to 8 ft on center
3. Cut and install the headers and soles.
- If shore is installed on soil, the standard 18" x 18" foot should be placed under sole at each post. (3-2x6x18" or 2-layers 3/4" ply)
4. Measure and install the two posts at each section.
- Make angle and return cuts similar to rakers.
- Toe-nail posts to headers, and drive bottoms of posts tight and toe-nail.(no wedges, since they get in the way of the braces)
5. Install bottom cleats tight against each post.
6. Anchor the sole plates, as follows:
- Anchor sole using drilled-in anchors into concrete, or 1"dia. X 36" pickets to anchor to paving or soil, based on Structures Spec. recommendations. (2 minimum per 2-post section).
- See page 3-9 for alternate Sole Plate Anchor system.
7. Measure for diagonal braces inside and outside each section.
8. Install 2x6 diagonal braces in position and nail to posts, headers and sole plates.(may use 3-16d into posts to limit splitting)
- Cleat/Half Gusset plate the opposite side of the posts, top and bottom, using the 4 and 4 nail pattern.
- Need to place Half Gussets to clear the horizontal and diagonal braces (to be installed next), or use 2x cleats instead of gussets.
9. Tie the two sections together, same as in Laced Posts. (See Additional Information for alternatives).
- Ties are placed between posts at the taller and the shorter ends of each shore section.
- Use a wide piece of 5/8" or 3/4" plywood (12" to 24" wide) if short end of shore is too short to fit X braces.
- The plywood or 2x6 bracing may be installed on the inside of the shorter posts, if that is easier.
10. Attach to the floor and ceiling. (If possible).

US&R SHORING OPERATIONS GUIDE
CONSTRUCTING VERTICAL SHORING SYSTEMS

HOW TO CONSTRUCT SLOPED FLOOR SHORE–TYPE 2
(May be constructed on Paving or on Soil)

1. Survey, install spot shores (if needed), and remove least amount of debris required to place the shore.
2. Determine length and width of shore and post locations.
- Header overhang is 12 inch maximum. Sole must extend 30" longer from front of longer post, to allow for cleat & anchors.
- Shore is built as pair of 2-post sections, like laced post.
- The 2 sections should be placed from 4 ft to 8 ft on center
3. Cut and install the headers and soles.
- If shore is installed on soil, the standard 18" x 18" foot should be placed under sole at each post. (3-2x6x18" or 2-layers 3/4" ply)
4. Measure and install the two posts at each section.
- Make angle and return cuts similar to rakers.
- Toe-nail posts to headers, and drive bottoms of posts tight and toe-nail.(no wedges, since they get in the way of the braces)
5. Install bottom cleats tight against each post.
6. Anchor the sole plates, as follows:
- Anchor sole using drilled-in anchors into concrete, or 1"dia. X 36" pickets to anchor to paving or soil, based on Structures Spec. recommendations. (2 minimum per 2-post section).
- See page 3-9 for alternate Sole Plate Anchor system.
7. Measure for diagonal braces inside and outside each section.
8. Install 2x6 diagonal braces in position and nail to posts, headers and sole plates.(may use 3-16d into posts to limit splitting)
- Cleat/Half Gusset plate the opposite side of the posts, top and bottom, using the 4 and 4 nail pattern.
- Need to place Half Gussets to clear the horizontal and diagonal braces (to be installed next), or use 2x cleats instead of gussets.
9. Tie the two sections together, same as in Laced Posts. (See Additional Information for alternatives).
- Ties are placed between posts at the taller and the shorter ends of each shore section.
- Use a wide piece of 5/8" or 3/4" plywood (12" to 24" wide) if short end of shore is too short to fit X braces.
- The plywood or 2x6 bracing may be installed on the inside of the shorter posts, if that is easier.
10. Attach to the floor and ceiling. (If possible).

2-39

2

ADDITIONAL INFORMATION – Type 2 & 3 Sloped Fl Shores

1. Posts: (Max. length = 8ft for 4 x 4 & 12ft for 6 x 6, if greater height is needed, build shore like Laced Post. See pg 2-41)
- Spacing for 4 x 4 posts: Maximum 4 feet on center.
- Spacing for 6 x 6 posts: Maximum 5 feet on center.
- Spacing between shores as pairs: 4 ft to 8 ft on center.

2. Header and Sole: same size as posts.
3. Half Gussets: on opposite sides of diagonals, top & bottom.
4. Diagonal Braces: (2 x 6 on each side or shore)
5. Soil Support: (18" x 18" foot at soil bearings only)
- 3 - 2 x 6 x 18" (flat) or 2 - 18" x 18" x 3/4" plywood layers, placed under each post.

6. May directly anchor sole with 2 – 1/2" x 8 ½" wedge anchors or 1/2" x 8" rebar or smooth bar, drill-in anchors, through sole into concrete floor.
7. Alternate Sole Anchor: see Section 3 for details.
- 4 x 4 or 6 x 6 (preferred) x spacing of shores + 4ft.
- 2 x 4 or 4 x 4 wedges at each shore.
- 4 or more 1" diameter x 36" long pickets.

8. Bracing/lacing between shores: (all are 2x6).
- Built in Pairs and Braced/laced together, or,
- Built in groups (4 feet min to 8 feet max on center).
- Horizontals & Diagonals are 2 x 6 (2 - 2 x 4 alternate).
- Horizontal Plywood Braces: 5/8" or 3/4" x 12" (min). where height is 3 ft or less, 11-8d each end.

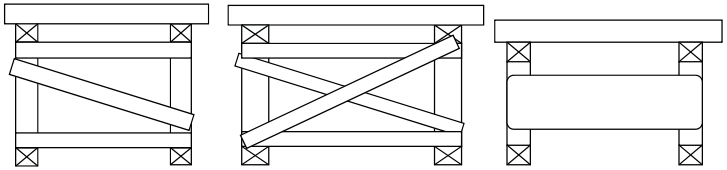

Up to 5ft o.c. 5ft to 8ft o.c. 3ft or less high
Bracing between Shores

US&R SHORING OPERATIONS GUIDE
CONSTRUCTING VERTICAL SHORING SYSTEMS

ADDITIONAL INFORMATION – Type 2 & 3 Sloped Fl Shores

1. Posts: (Max. length = 8ft for 4 x 4 & 12ft for 6 x 6, if greater height is needed, build shore like Laced Post. See pg 2-41)
- Spacing for 4 x 4 posts: Maximum 4 feet on center.
- Spacing for 6 x 6 posts: Maximum 5 feet on center.
- Spacing between shores as pairs: 4 ft to 8 ft on center.

2. Header and Sole: same size as posts.
3. Half Gussets: on opposite sides of diagonals, top & bottom.
4. Diagonal Braces: (2 x 6 on each side or shore)
5. Soil Support: (18" x 18" foot at soil bearings only)
- 3 - 2 x 6 x 18" (flat) or 2 - 18" x 18" x 3/4" plywood layers, placed under each post.

6. May directly anchor sole with 2 – 1/2" x 8 ½" wedge anchors or 1/2" x 8" rebar or smooth bar, drill-in anchors, through sole into concrete floor.
7. Alternate Sole Anchor: see Section 3 for details.
- 4 x 4 or 6 x 6 (preferred) x spacing of shores + 4ft.
- 2 x 4 or 4 x 4 wedges at each shore.
- 4 or more 1" diameter x 36" long pickets.

8. Bracing/lacing between shores: (all are 2x6).
- Built in Pairs and Braced/laced together, or,
- Built in groups (4 feet min to 8 feet max on center).
- Horizontals & Diagonals are 2 x 6 (2 - 2 x 4 alternate).
- Horizontal Plywood Braces: 5/8" or 3/4" x 12" (min). where height is 3 ft or less, 11-8d each end.

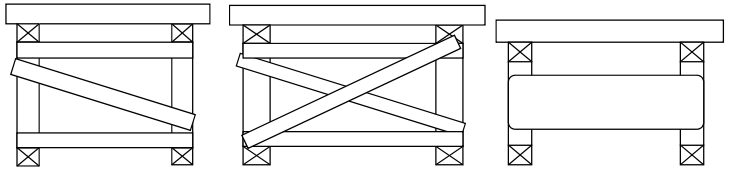

Up to 5ft o.c. 5ft to 8ft o.c. 3ft or less high
Bracing between Shores

2-40

ALTERNATE METHODS for building VERTICAL SHORES

1. **Shoring Lumber**: If Doug Fir & Southern Pine are not available

- May use Hem-Fir or Spruce-Pine-Fir, reduce strength by 15%
- May use Eastern Softwoods, Western Cedar, & Western Woods, reduce strength by 25%
- This applies to 1x4, 2x4, 2x6, 4x4, and 6x6 lumber.
- May use 19/32 CDX plywood or Oriented Strand Board (OSB)

2. If 4 x 4 lumber IS NOT available, may use 3-2x4s:

- For Posts, Headers, & Soles in Vertical, Sloped Fl, & Window Shores, **each 2x4 must be full length.**
- Nail 3-2x4s together with 16d sinker/cooler @ 5"o.c. stagger. thus: from each side. (.148 x 3.25" coated nails)
- If using 8ft long (3-2x4) for Raker Wall & Sole Plates: stagger all joints by 2ft min, and locate only one joint in any location.
  - 12ft long example:

- For Rakers & Laced Posts, may joint all 2 x 4 in same location, and use Standard Plywood Splice. (See Page 3-8)
  - Example:

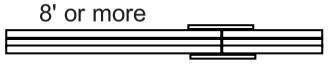

  - Locate splice within 2ft of brace point. See Structures Spec.

3. **Sloped Floor Shore Special Notes**:

- If taller than 8ft for 4x4 & 12ft for 6x6 Posts:
  - Add mid-point bracing and sets of diagonals same as for Laced Posts. See page 2-30.
  - Post spacing is 4ft o.c. for 4x4 and 5ft o.c. for 6x6.
  - Maximum height is 12ft for 4x4 and 16ft for 6x6.
- If slope of structure is greater than 45 deg., build shores to be more like Rakers, spaced at 4ft o.c.
  - Provide mid-brace if Raker/Post is more than 8ft long.
  - Consult Struct Spec. for cleat nailing & sole anchors.

US&R SHORING OPERATIONS GUIDE
CONSTRUCTING VERTICAL SHORING SYSTEMS

ALTERNATE METHODS for building VERTICAL SHORES

1. Shoring Lumber: If Doug Fir & Southern Pine are not available
- May use Hem-Fir or Spruce-Pine-Fir, reduce strength by 15%
- May use Eastern Softwoods, Western Cedar, & Western Woods, reduce strength by 25%
- This applies to 1x4, 2x4, 2x6, 4x4, and 6x6 lumber.
- May use 19/32 CDX plywood or Oriented Strand Board (OSB)
2. If 4 x 4 lumber IS NOT available, may use 3-2x4s:
- For Posts, Headers, & Soles in Vertical, Sloped Fl, & Window Shores, each 2x4 must be full length.
- Nail 3-2x4s together with 16d sinker/cooler @ 5"o.c. stagger. thus: from each side. (.148 x 3.25" coated nails)
- If using 8ft long (3-2x4) for Raker Wall & Sole Plates: stagger all joints by 2ft min, and locate only one joint in any location.
  - 12ft long example:

- For Rakers & Laced Posts, may joint all 2 x 4 in same location, and use Standard Plywood Splice. (See Page 3-8)
  - Example:

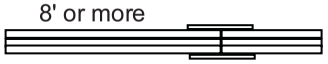

  - Locate splice within 2ft of brace point. See Structures Spec.
3. Sloped Floor Shore Special Notes:
- If taller than 8ft for 4x4 & 12ft for 6x6 Posts:
  - Add mid-point bracing and sets of diagonals same as for Laced Posts. See page 2-30.
  - Post spacing is 4ft o.c. for 4x4 and 5ft o.c. for 6x6.
  - Maximum height is 12ft for 4x4 and 16ft for 6x6.
- If slope of structure is greater than 45 deg., build shores to be more like Rakers, spaced at 4ft o.c.
  - Provide mid-brace if Raker/Post is more than 8ft long.
  - Consult Struct Spec. for cleat nailing & sole anchors.
2-41

SLOPED FLOOR SHORE–Type 3 (Vertical/Class 3)

Built in pairs similar to Type 2 Sloped Floor Shore. Support concrete floors that **are not connected** to remaining structure and may slide.	
Material List: (for a pair of shores)	
2 - Headers & Soles	8 - Half Gussets
4 – Posts	4- 2x cleats x 18", 11-16d
4 – Wedge Sets (Optional)	4 – 1/2" drill-in anchors
4 - Diagonal Braces (1 each side each shore)	
Sole Anchor from 4 x 4 / 6 x 6 w/ 4 - 1"dia. X 36"pickets.	
Bracing between shores: See bottom of page 2-40	

Max. Slope = 45 deg.
See Note 3, Pg 2-41

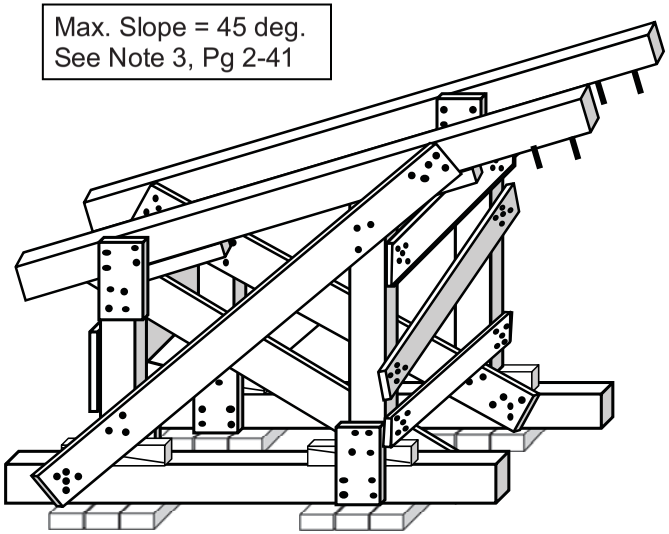

Foot only at soil bearing

Design Load (depends on slope): 4x4 Posts = 24,000lb Max.
(Consult Structures Specialist) 6x6 Posts = 60,000lb Max.

US&R SHORING OPERATIONS GUIDE
CONSTRUCTING VERTICAL SHORING SYSTEMS

SLOPED FLOOR SHORE–Type 3 (Vertical/Class 3)

Built in pairs similar to Type 2 Sloped Floor Shore. Support concrete floors that **are not connected** to remaining structure and may slide.	
Material List: (for a pair of shores)	
2 - Headers & Soles	8 - Half Gussets
4 – Posts	4- 2x cleats x 18", 11-16d
4 – Wedge Sets (Optional)	4 – 1/2" drill-in anchors
4 - Diagonal Braces (1 each side each shore)	
Sole Anchor from 4 x 4 / 6 x 6 w/ 4 - 1"dia. X 36"pickets.	
Bracing between shores: See bottom of page 2-40	

Max. Slope = 45 deg.
See Note 3, Pg 2-41

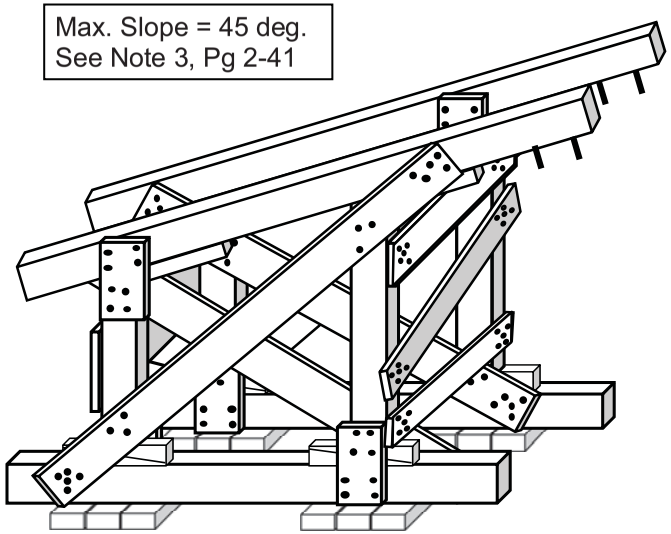

Foot only at soil bearing

Design Load (depends on slope): 4x4 Posts = 24,000lb Max.
(Consult Structures Specialist) 6x6 Posts = 60,000lb Max.

2-42

HOW TO CONSTRUCT SLOPED FLOOR SHORE–TYPE 3

1. Survey, install spot shores (if needed), and remove debris.
2. Determine length and width of shore and post locations.
- Shore is built as pair of 2-post sections, like laced post.
- The 2 sections should be placed from 4 ft to 8 ft on center
- Header overhang is 12 inches on shorter end, but should be increased to 30" at higher end for cleat and anchors. Sole plates should extend 12 inches beyond each post.
- Install headers and sole plates, and anchor header.
- If shore is installed on soil, the standard 18" x 18" foot should be placed under the sole at each post.
- Prepare to install one,18 inch cleat, for each post on underside of header (pre-install as many as possible cleats on header w/ 11-16d nails, to reduce nailing in Collapse Zone).

3. Measure, angle/return cut, and install the two posts for each section; toe-nail to header, then drive posts tight and plumb. **Wedges are optional**, but may be used as with vertical shores.
4. Make sure posts are plumb, and install remaining 18" top cleats.
5. Attached header to ceiling/slab bottom with 2 - 1/2" x 8 ½" wedge anch., or ½" rebar/plain bar x 8" min. (embed at least 4")
6. Anchor the sole plate, and re-check/re-drive the post tight.
7. Measure for the diag. braces inside/outside of each section.
8. Install 2x6 diagonal braces in position and nail to posts, header, and sole plate. (may use 3-16d into posts to limit splitting)
- Place Half-Gusset plate the opposite side of the posts, top and bottom, and complete gusset nailing – 4 & 4, 8d.
  Note: Half-Gussets may be installed with posts – partly nailed.
- Need to place Half-Gussets to clear the horizontal and diagonal braces (to be installed next) -
9. Tie the two sections together, same as in Laced Posts. (See Additional Information for alternatives).
- Ties are placed between posts at the taller and the shorter ends of each shore section.
- Use a wide piece of 5/8" or 3/4" plywood (12" to 24" wide) if short end of shore is too short to fit X braces.
- The plywood or 2x6 bracing may be installed on the inside of the shorter posts, if that is easier.
10. Attached to the floor and ceiling. (If possible).

US&R SHORING OPERATIONS GUIDE
CONSTRUCTING VERTICAL SHORING SYSTEMS

HOW TO CONSTRUCT SLOPED FLOOR SHORE–TYPE 3

1. Survey, install spot shores (if needed), and remove debris.
2. Determine length and width of shore and post locations.
- Shore is built as pair of 2-post sections, like laced post.
- The 2 sections should be placed from 4 ft to 8 ft on center
- Header overhang is 12 inches on shorter end, but should be increased to 30" at higher end for cleat and anchors. Sole plates should extend 12 inches beyond each post.
- Install headers and sole plates, and anchor header.
- If shore is installed on soil, the standard 18" x 18" foot should be placed under the sole at each post.
- Prepare to install one,18 inch cleat, for each post on underside of header (pre-install as many as possible cleats on header w/ 11-16d nails, to reduce nailing in Collapse Zone).

2

3. Measure, angle/return cut, and install the two posts for each section; toe-nail to header, then drive posts tight and plumb. **Wedges are optional**, but may be used as with vertical shores.
4. Make sure posts are plumb, and install remaining 18" top cleats.
5. Attached header to ceiling/slab bottom with 2 - 1/2" x 8 ½" wedge anch., or ½" rebar/plain bar x 8" min. (embed at least 4")
6. Anchor the sole plate, and re-check/re-drive the post tight.
7. Measure for the diag. braces inside/outside of each section.
8. Install 2x6 diagonal braces in position and nail to posts, header, and sole plate. (may use 3-16d into posts to limit splitting)
- Place Half-Gusset plate the opposite side of the posts, top and bottom, and complete gusset nailing – 4 & 4, 8d.
  Note: Half-Gussets may be installed with posts – partly nailed.
- Need to place Half-Gussets to clear the horizontal and diagonal braces (to be installed next) -
9. Tie the two sections together, same as in Laced Posts. (See Additional Information for alternatives).
- Ties are placed between posts at the taller and the shorter ends of each shore section.
- Use a wide piece of 5/8" or 3/4" plywood (12" to 24" wide) if short end of shore is too short to fit X braces.
- The plywood or 2x6 bracing may be installed on the inside of the shorter posts, if that is easier.
10. Attached to the floor and ceiling. (If possible).

2-43

CRIBBING (Vertical/Class 3)

Cribbing is an easily adjustable shore for height and width dimensions. Height must be limited due to large amount of deflection due to crushing, especially when different crushing rates occur at different bearings.
Material List:
Depends on height, number of pieces per layer and the height of each piece. See configurations below.

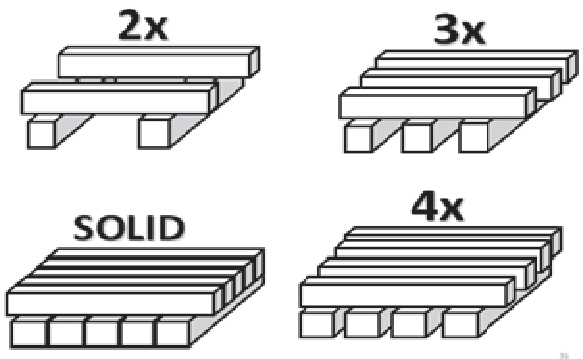

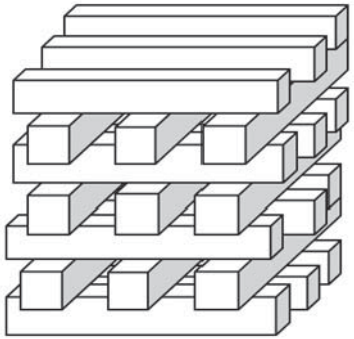

US&R SHORING OPERATIONS GUIDE
CONSTRUCTING VERTICAL SHORING SYSTEMS

CRIBBING (Vertical/Class 3)

Cribbing is an easily adjustable shore for height and width dimensions. Height must be limited due to large amount of deflection due to crushing, especially when different crushing rates occur at different bearings.

Material List:

Depends on height, number of pieces per layer and the height of each piece. See configurations below.

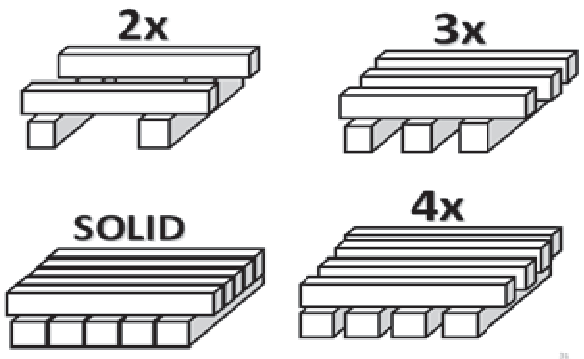

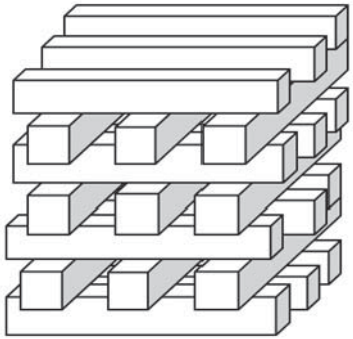

HOW TO CONSTRUCT CRIBBING

1. Survey, install spot shores (if needed), and remove debris.
2. Determine where Spot Shores should be built in order to quickly reduce risk.
3. Determine overall height of area to be shored and remove least amount of debris required to place shore.
4. Determine the desired width dimensions of the crib.
5. Determine the size of the members to be used, and the configuration of the crib layers.

- Use 6x6 members if crib needs to be more than 4 ft high.
- Note that the 3-member x 3-member configuration is more than 2 times as strong as 2-member x 2-member.

6. Decide if the first layer needs to be a solid layer, depending on the type of bearing material. (soil or other surface softer than a concrete slab.

- If the supporting surface is concrete, make sure that it has the required stiffness and capacity, and there is not a basement story below.

7. Carefully slide the members in for each layer, and keep the crib aligned and as square as possible.
8. When the crib reaches required height, add shims to make sure that all intersections of crib members are in solid contact with the supported structure.
9. Attach the crib to the supporting surface (or confine its movement), if practical.
10. Where vibration and aftershocks may occur, interconnect the crib layers with 3/8" min x 16" long plywood strips that are 1.5 times as high as the cribbing members.

- The plywood strips need to be placed on all 4 sides of the crib.
- Nail plywood strips at top and bottom edges to crib members with 8d at 3 inches on center as shown below:

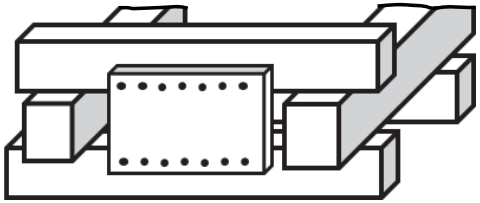

US&R SHORING OPERATIONS GUIDE
CONSTRUCTING VERTICAL SHORING SYSTEMS

HOW TO CONSTRUCT CRIBBING

1. Survey, install spot shores (if needed), and remove debris.
2. Determine where Spot Shores should be built in order to quickly reduce risk.
3. Determine overall height of area to be shored and remove least amount of debris required to place shore.
4. Determine the desired width dimensions of the crib.
5. Determine the size of the members to be used, and the configuration of the crib layers.

- Use 6x6 members if crib needs to be more than 4 ft high.
- Note that the 3-member x 3-member configuration is more than 2 times as strong as 2-member x 2-member.

6. Decide if the first layer needs to be a solid layer, depending on the type of bearing material. (soil or other surface softer than a concrete slab.

- If the supporting surface is concrete, make sure that it has the required stiffness and capacity, and there is not a basement story below.

7. Carefully slide the members in for each layer, and keep the crib aligned and as square as possible.
8. When the crib reaches required height, add shims to make sure that all intersections of crib members are in solid contact with the supported structure.
9. Attach the crib to the supporting surface (or confine its movement), if practical.
10. Where vibration and aftershocks may occur, interconnect the crib layers with 3/8" min x 16" long plywood strips that are 1.5 times as high as the cribbing members.

- The plywood strips need to be placed on all 4 sides of the crib.
- Nail plywood strips at top and bottom edges to crib members with 8d at 3 inches on center as shown below:

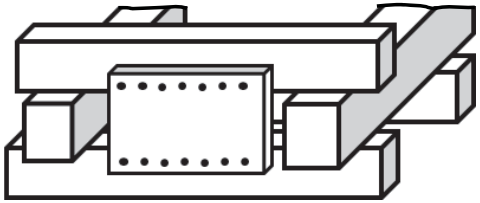

2-45

2

ADDITIONAL INFORMATION - Cribbing

1. Height: Max. Ratio, Ht to Width = 3 x shortest width.

- Recommended Max. height for 4x4 systems is 4 feet.
- Recommended Max. height for 6x6 systems is 6 feet.

2. Solid bottom layer for soil or asphalt applications.
3. Overlap corners by at least 4 inches.
4. Design Load Basis –

- Cross-grain bearing of the wood (varies from 200 psi to 1,000 psi – Use 500 psi for Douglas Fir and Southern Pine).
- Load per bearing point.
- Number of Bearing Points.
- Design Load Formula: L = A x N x P

  L = Load
  A = Area of single bearing point (sq. in.)
  N = Number of Bearing Points
  P = Allowable bearing pressure (psi)
- Design Load for 4x4 Douglas Fir & Southern Pine.

  2 member x 2 member system = 24,000lbs
  3 member x 3 member system = 54,000lbs
- Design Load for 6x6 Douglas Fir & Southern Pine.

  2 member x 2 member system = 60,000lbs
  3 member x 3 member system = 135,000lbs

US&R SHORING OPERATIONS GUIDE
CONSTRUCTING VERTICAL SHORING SYSTEMS

ADDITIONAL INFORMATION - Cribbing

1. Height: Max. Ratio, Ht to Width = 3 x shortest width.

- Recommended Max. height for 4x4 systems is 4 feet.
- Recommended Max. height for 6x6 systems is 6 feet.

2. Solid bottom layer for soil or asphalt applications.
3. Overlap corners by at least 4 inches.
4. Design Load Basis –

- Cross-grain bearing of the wood (varies from 200 psi to 1,000 psi – Use 500 psi for Douglas Fir and Southern Pine).
- Load per bearing point.
- Number of Bearing Points.
- Design Load Formula: L = A x N x P

  L = Load
  A = Area of single bearing point (sq. in.)
  N = Number of Bearing Points
  P = Allowable bearing pressure (psi)
- Design Load for 4x4 Douglas Fir & Southern Pine.

  2 member x 2 member system = 24,000lbs
  3 member x 3 member system = 54,000lbs
- Design Load for 6x6 Douglas Fir & Southern Pine.

  2 member x 2 member system = 60,000lbs
  3 member x 3 member system = 135,000lbs

2-46

CRIBBING at SLOPED FLOOR (Vertical/Class 3)

Cribbing can be built under a concrete sloped floor . Wedges and shims should be added to each layer in order to achieve the slope gradually. The Max. Slope should be 30% off the horizontal (about 15 deg). The Max. Height should be 4ft when using 4x4 lumber, and 6ft for when using 6x6 lumber.
Material List:
Depends on height, number of pieces per layer and the height of each piece. See configurations below.

2

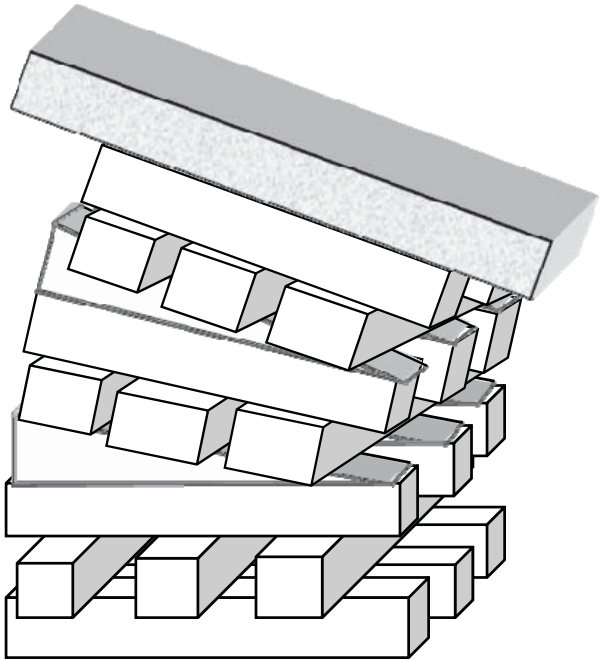

US&R SHORING OPERATIONS GUIDE
CONSTRUCTING VERTICAL SHORING SYSTEMS

CRIBBING at SLOPED FLOOR (Vertical/Class 3)

Cribbing can be built under a concrete sloped floor . Wedges and shims should be added to each layer in order to achieve the slope gradually. The Max. Slope should be 30% off the horizontal (about 15 deg). The Max. Height should be 4ft when using 4x4 lumber, and 6ft for when using 6x6 lumber.

Material List:

Depends on height, number of pieces per layer and the height of each piece. See configurations below.

2

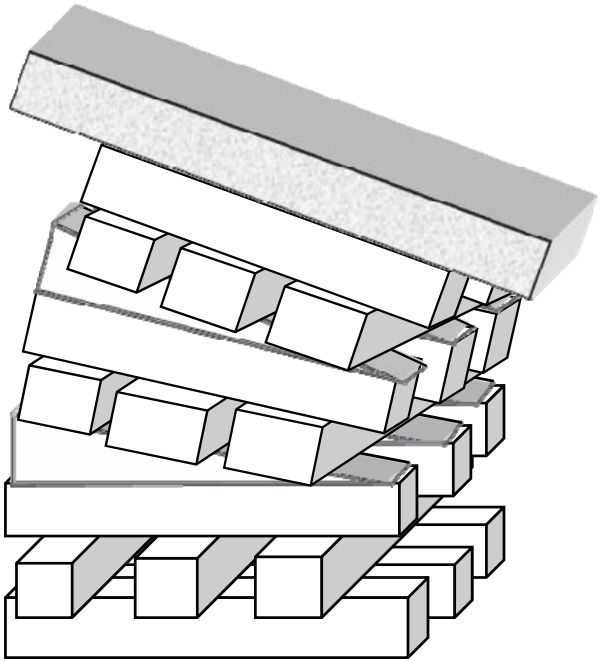

2-47

WINDOW AND DOOR SHORE (Vertical/Class 2)

This shore is used in URM buildings to support loose masonry over openings. May be used in other building types where door /window headers are damaged.	
Material List:	
Header and Sole	4 Wedge Sets
2 Posts	1 Half Gusset
3 Cleats	Shims as required
Diagonal Braces 2 - 2 x 4 (if not used for access)	

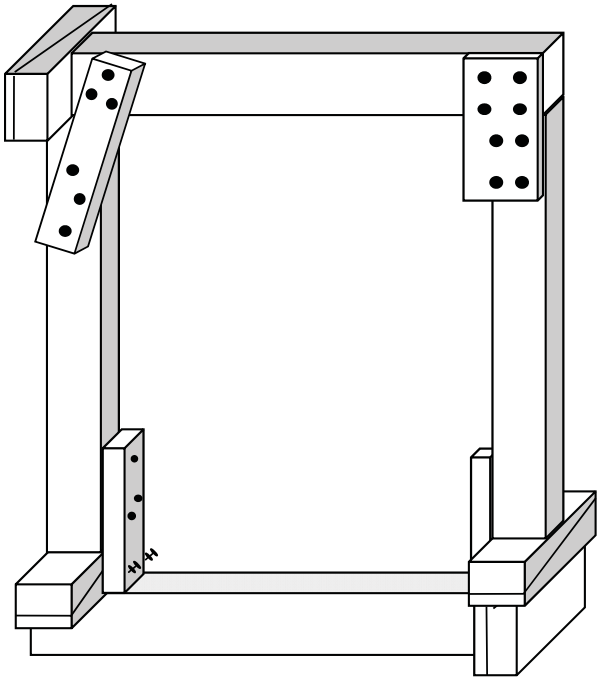

Design Load: 4x4 Header = 2,000 lb 6x6 = 6000lb

US&R SHORING OPERATIONS GUIDE
CONSTRUCTING VERTICAL SHORING SYSTEMS

WINDOW AND DOOR SHORE (Vertical/Class 2)

This shore is used in URM buildings to support loose masonry over openings. May be used in other building types where door /window headers are damaged.	
Material List:	
Header and Sole	4 Wedge Sets
2 Posts	1 Half Gusset
3 Cleats	Shims as required
Diagonal Braces 2 - 2 x 4 (if not used for access)	

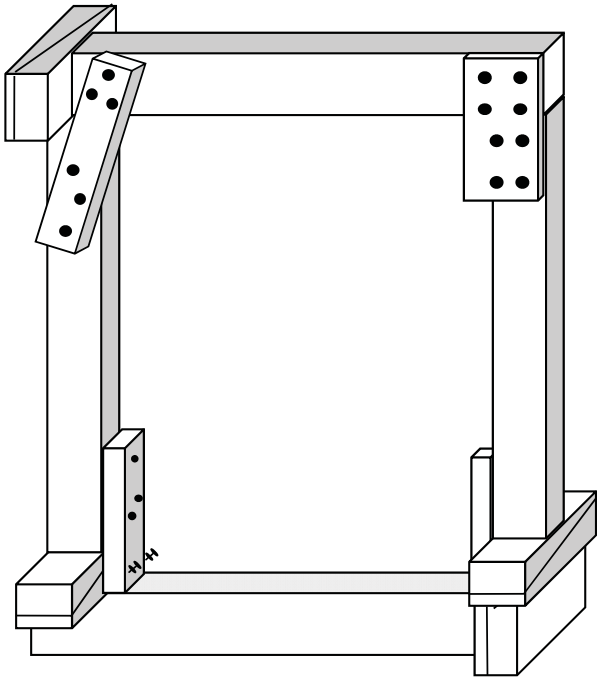

Design Load: 4x4 Header = 2,000 lb 6x6 = 6000lb

2-48

HOW TO CONSTRUCT THE WINDOW/DOOR SHORE

1. Survey, remove finishes (if required), and remove debris.
2. Measure and cut the sole plate and header to the proper length deducting the width of the wedges to be used.
3. Make header 1" deep for every foot of opening; 4x4 min.
4. Have StS design header for opening over 4ft wide.
5. Measure and cut the posts to the proper height.

- Place the header on top of the sole plate.
- To determine post height, place the end of the tape measure on top of the header where the posts are to be installed, slide the tape up to the bottom of the structural element to be shored deducting the thickness of the wedges to be used. (Use the shorter of the two measurements).

6. Install the sole with a set of wedges at one end and tap them together simultaneously until the sole is tight.
7. The sole should be as level as possible: use shims as necessary under the sole plate.
8. Install the header with a set of wedges at the opposite end of the sole and tap them together until the header is tight.
9. The header should be as level as possible; use shims as necessary above the header.
10. Install the posts between the header and sole, and against the sides of the opening.
11. Install the first post under the wedge side of the header to prevent movement if the header wedges loosen.
12. Keep posts in line and plumb with header and sole.
13. Install a wedge set under each post, on top of the sole. Wedges are then tightened to lock shore in place.
14. Attach cleat and half-gusset to at least one side of the header and posts and nail in place.
15. Confine the wedges by placing a cleat against the inside face of each post at the bottom and nail them in place with 3-16d nails to each post and 2-16d toe nails to the sole.

- May use duplex nails for future adjustment of the wedges.

US&R SHORING OPERATIONS GUIDE
CONSTRUCTING VERTICAL SHORING SYSTEMS

HOW TO CONSTRUCT THE WINDOW/DOOR SHORE

1. Survey, remove finishes (if required), and remove debris.
2. Measure and cut the sole plate and header to the proper length deducting the width of the wedges to be used.
3. Make header 1" deep for every foot of opening; 4x4 min.
4. Have StS design header for opening over 4ft wide.
5. Measure and cut the posts to the proper height.

- Place the header on top of the sole plate.
- To determine post height, place the end of the tape measure on top of the header where the posts are to be installed, slide the tape up to the bottom of the structural element to be shored deducting the thickness of the wedges to be used. (Use the shorter of the two measurements).

6. Install the sole with a set of wedges at one end and tap them together simultaneously until the sole is tight.
7. The sole should be as level as possible: use shims as necessary under the sole plate.
8. Install the header with a set of wedges at the opposite end of the sole and tap them together until the header is tight.
9. The header should be as level as possible; use shims as necessary above the header.
10. Install the posts between the header and sole, and against the sides of the opening.
11. Install the first post under the wedge side of the header to prevent movement if the header wedges loosen.
12. Keep posts in line and plumb with header and sole.
13. Install a wedge set under each post, on top of the sole. Wedges are then tightened to lock shore in place.
14. Attach cleat and half-gusset to at least one side of the header and posts and nail in place.
15. Confine the wedges by placing a cleat against the inside face of each post at the bottom and nail them in place with 3-16d nails to each post and 2-16d toe nails to the sole.

- May use duplex nails for future adjustment of the wedges.

2-49

2

PRE-CONSTRUCTED SHORING SYSTEMS

1. Window/Door Shores may be pre-constructed as shown in Prefabricated Window/Door Shore (next page).
   - They should be made at least 1 ½" less than opening in each direction, and then tightened with wedges at one side and bottom + shims as required.
     - If header is badly damaged, great care should be taken during installation of the shoring and shims.
     - It shims are needed at the top, one should try to eliminate the wedges at the bottom.
   - Pre-constructed Window & Door Shores will not be practical in racked or otherwise deformed openings.
   - For large openings, pre-constructed shores may be too heavy to carry up to locations above ground floor.
   - Main advantage is to allow pre-construction a safe distance from the dangerous wall or collapse zone.

2. **Pneumatic Shores**, with a minimum of two shores with wood or metal rail header. (see page following Alt Window Shore)
   - Metal ends should be nailed to header and sole.
   - The manufacturers sell clamp fittings that allow for nailed 2x6 X bracing to be installed.
   - Pneumatic shores are best used as temporary shores.
   - Some manufacturers provide a Header Rail that may be per-assembled with two or more struts to provide a pre-constructed, vertical shore.
   - **WARNING** – The use of **Air Pressure** to raise these shores into place has caused accidents. Air Pressure should be limited to 50 PSI, and all Pneumatic Shores should be hand tightened – to snug condition.
   - See Strut Tables in Sect 7 of StS FOG for recommended Strut Loading based on height (length).

US&R SHORING OPERATIONS GUIDE
CONSTRUCTING VERTICAL SHORING SYSTEMS

PRE-CONSTRUCTED SHORING SYSTEMS

1. Window/Door Shores may be pre-constructed as shown in Prefabricated Window/Door Shore (next page).
   - They should be made at least 1 ½" less than opening in each direction, and then tightened with wedges at one side and bottom + shims as required.
     - If header is badly damaged, great care should be taken during installation of the shoring and shims.
     - It shims are needed at the top, one should try to eliminate the wedges at the bottom.
   - Pre-constructed Window & Door Shores will not be practical in racked or otherwise deformed openings.
   - For large openings, pre-constructed shores may be too heavy to carry up to locations above ground floor.
   - Main advantage is to allow pre-construction a safe distance from the dangerous wall or collapse zone.

2. **Pneumatic Shores**, with a minimum of two shores with wood or metal rail header. (see page following Alt Window Shore)
   - Metal ends should be nailed to header and sole.
   - The manufacturers sell clamp fittings that allow for nailed 2x6 X bracing to be installed.
   - Pneumatic shores are best used as temporary shores.
   - Some manufacturers provide a Header Rail that may be per-assembled with two or more struts to provide a pre-constructed, vertical shore.
   - **WARNING** – The use of **Air Pressure** to raise these shores into place has caused accidents. Air Pressure should be limited to 50 PSI, and all Pneumatic Shores should be hand tightened – to snug condition.
   - See Strut Tables in Sect 7 of StS FOG for recommended Strut Loading based on height (length).

2-50

PREFABRICATED WINDOW/DOOR SHORE

Alternate to built in-place Window/Door Shore. Main advantage is to allow pre-construction a safe distance from the collapse zone. Also the shore can be reused.	
Material List:	
Header and Sole	4 - Wedge Sets
2 - Posts	8- Half Gussets

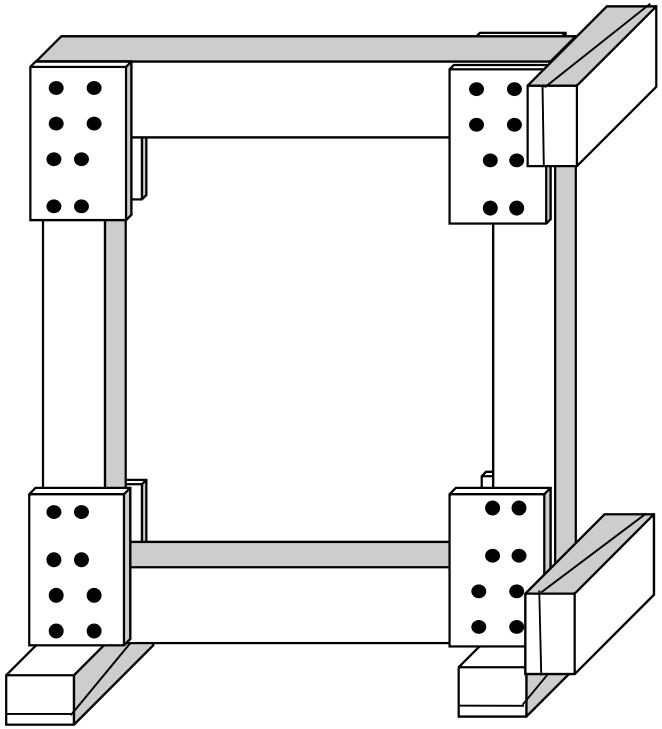

2

Design Load: 4x4 Header = 2,000 lb 6x6 = 6000lb

US&R SHORING OPERATIONS GUIDE
CONSTRUCTING VERTICAL SHORING SYSTEMS

PREFABRICATED WINDOW/DOOR SHORE

Alternate to built in-place Window/Door Shore. Main advantage is to allow pre-construction a safe distance from the collapse zone. Also the shore can be reused.	
Material List:	
Header and Sole	4 - Wedge Sets
2 - Posts	8- Half Gussets

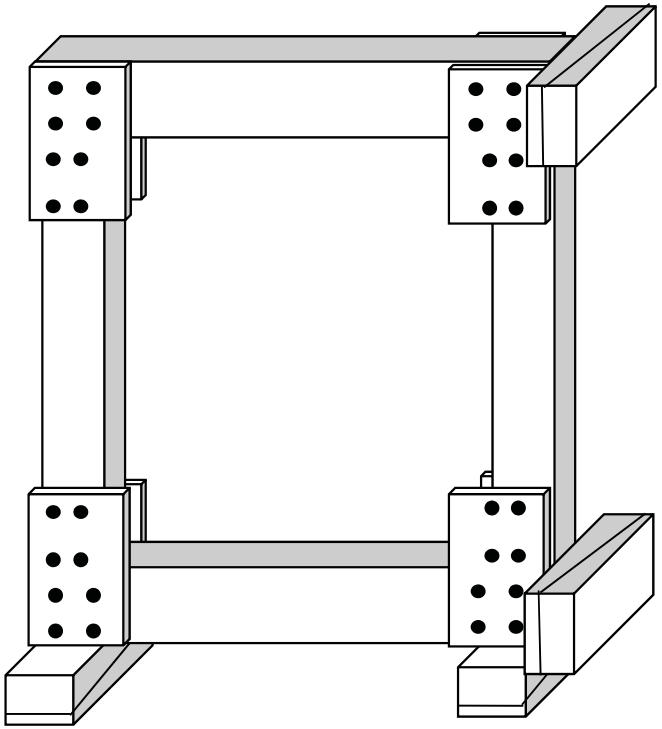

2

Design Load: 4x4 Header = 2,000 lb 6x6 = 6000lb

2-51

HOW TO CONSTRUCT THE PREFAB. WINDOW/DOOR SHORE

1. Survey, remove finishes (if required), and remove debris.
2. Measure opening and check to see if it is square or racked.
3. Measure and cut header and sole 1 ½ inches less than opening width to allow for wedges.
4. Measure and cut post. Length should allow for the thickness of sole and header and an additional 1 ½ inches for wedges.
5. Place one Half Gusset from each post to header and to sole. Nail each half gusset with 8-8d.
6. Turn shore over and place a half gusset on opposite side of previously installed gussets.
7. Carry shore to opening and install one wedge set under the sole at each end.
8. Install one wedge set between header and door/window side edge.
9. Install one wedge set between sole and door/window side edge.
10. Place shims between top of header and top edge of opening at mid-span and as required for adequate support.

US&R SHORING OPERATIONS GUIDE
CONSTRUCTING VERTICAL SHORING SYSTEMS

HOW TO CONSTRUCT THE PREFAB. WINDOW/DOOR SHORE

1. Survey, remove finishes (if required), and remove debris.
2. Measure opening and check to see if it is square or racked.
3. Measure and cut header and sole 1 ½ inches less than opening width to allow for wedges.
4. Measure and cut post. Length should allow for the thickness of sole and header and an additional 1 ½ inches for wedges.
5. Place one Half Gusset from each post to header and to sole. Nail each half gusset with 8-8d.
6. Turn shore over and place a half gusset on opposite side of previously installed gussets.
7. Carry shore to opening and install one wedge set under the sole at each end.
8. Install one wedge set between header and door/window side edge.
9. Install one wedge set between sole and door/window side edge.
10. Place shims between top of header and top edge of opening at mid-span and as required for adequate support.

2-52

VERTICAL SHORING USING PNEUMATIC STRUTS

Pneumatic Strut Manufacturers have developed special configurations that may be used to construct Vertical Shores. See following pages for configurations.

1. Struts may be configured as T, Dbl-T, Vertical 2-post and Multi-Post Shores. In addition there are special configurations such as: 3-Post Column, Sloped Floor Shore, Window/Door Shore, and Laced Post Shore.
2. Wood headers are used in most cases, and Wood Soles are needed when the load needs to be spread-out on the structure that is supporting the shore.
3. The standard Pneumatic Shore Base Plates may be used when shore in bearing on an adequate concrete slab. Consult qualified Structures Specialist.
4. The strength of these shores may be determined by knowing the height and number of struts that are used. The Strut Load Tables are shown in Sect 4 of SOG & Sect 7 of FOG. Consult qualified Structures Specialist, since other factors such as header or sole strength may govern the shore capacity.
5. Low pressure air (50psi max) may be used to extend the struts, but care must be taken to not impact the structure.
6. Use hand tightening to snug-up all joints.

US&R SHORING OPERATIONS GUIDE
CONSTRUCTING VERTICAL SHORING SYSTEMS

VERTICAL SHORING USING PNEUMATIC STRUTS

Pneumatic Strut Manufacturers have developed special configurations that may be used to construct Vertical Shores. See following pages for configurations.

1. Struts may be configured as T, Dbl-T, Vertical 2-post and Multi-Post Shores. In addition there are special configurations such as: 3-Post Column, Sloped Floor Shore, Window/Door Shore, and Laced Post Shore.
2. Wood headers are used in most cases, and Wood Soles are needed when the load needs to be spread-out on the structure that is supporting the shore.
3. The standard Pneumatic Shore Base Plates may be used when shore in bearing on an adequate concrete slab. Consult qualified Structures Specialist.
4. The strength of these shores may be determined by knowing the height and number of struts that are used. The Strut Load Tables are shown in Sect 4 of SOG & Sect 7 of FOG. Consult qualified Structures Specialist, since other factors such as header or sole strength may govern the shore capacity.
5. Low pressure air (50psi max) may be used to extend the struts, but care must be taken to not impact the structure.
6. Use hand tightening to snug-up all joints.

2

2-53

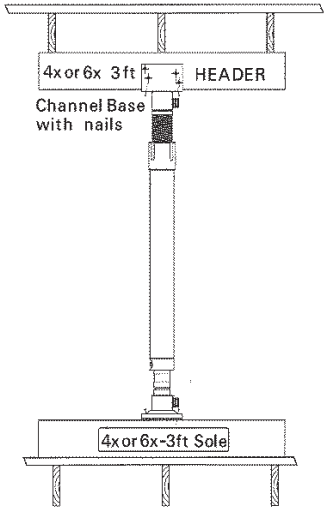

PNEUMATIC T-SHORE
Temporary, Spot Shore that is relatively unstable.
The load must be centered on the post.

Capacity should not be assumed to be more than 1,000lb

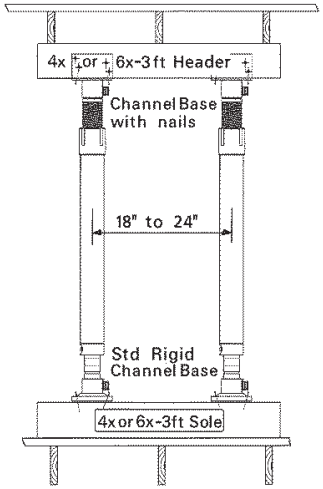

DBL-T SHORE
Uses 2 – Struts with header and sole.
It may be used as a Temporary, Spot Shore, but is more stable than T Shore

Shore capacity may be based on the length of the struts as given in the table in Section 7.

US&R SHORING OPERATIONS GUIDE
CONSTRUCTING VERTICAL SHORING SYSTEMS

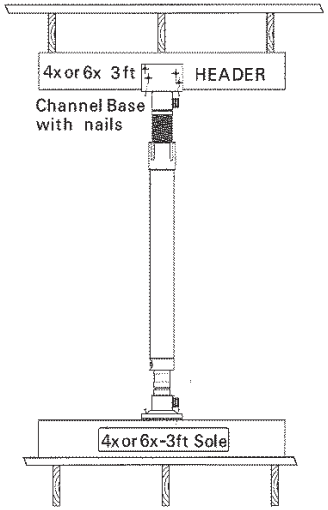

PNEUMATIC T-SHORE
Temporary, Spot Shore that is relatively unstable.
The load must be centered on the post.

Capacity should not be assumed to be more than 1,000lb

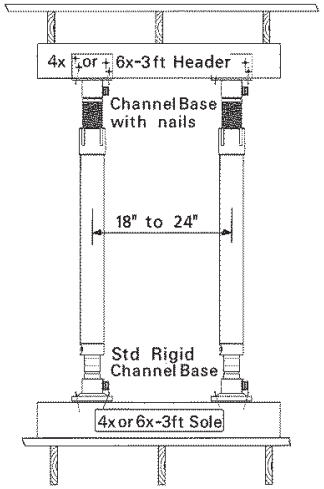

DBL-T SHORE
Uses 2 – Struts with header and sole.
It may be used as a Temporary, Spot Shore, but is more stable than T Shore

Shore capacity may be based on the length of the struts as given in the table in Section 7.

2-54

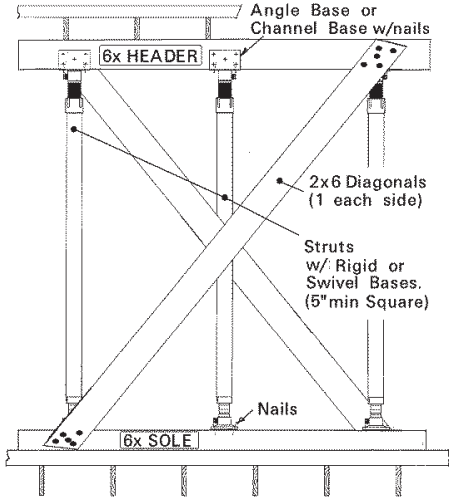

VERTICAL SHORE
Use 3 or more struts with header, sole and X-bracing as shown.

Capacity may be based on the length of the struts as given in the table in Sect 7.

2

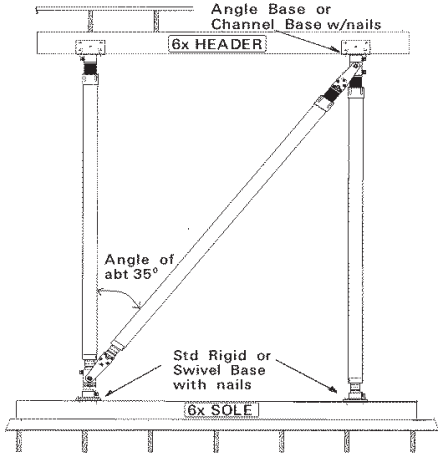

2-POST VERTICAL SHORE
Use 2- vertical struts, plus a diagonal strut that must be configured to resist both tension & compression

US&R SHORING OPERATIONS GUIDE
CONSTRUCTING VERTICAL SHORING SYSTEMS

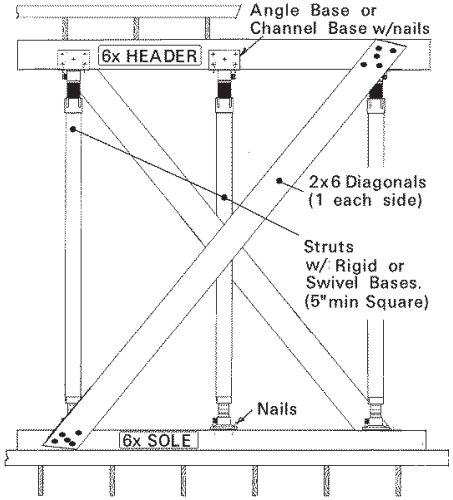

VERTICAL SHORE
Use 3 or more struts with header, sole and X-bracing as shown.

Capacity may be based on the length of the struts as given in the table in Sect 7.

2

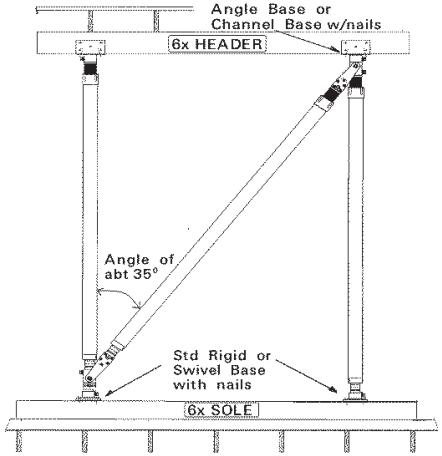

2-POST VERTICAL SHORE
Use 2- vertical struts, plus a diagonal strut that must be configured to resist both tension & compression

2-55

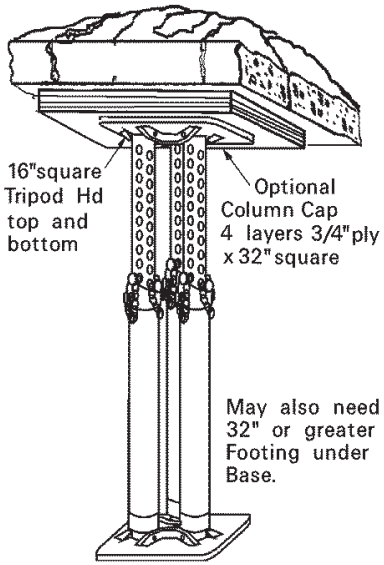

3-STRUT COLUMN
Uses 3 pneumatic struts with specially manufactured cap and foot.
Cap and Base may need wood cribbing or multi-layers of plywood to spread the load.

Shore capacity may be based on the length of the struts as given in the table in Section 7.

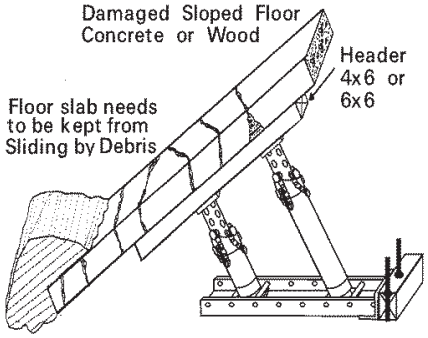

SLOPED FLOOR SHORE
Uses a minimum of 2-pneumatic struts, and is a Temporary, Spot Shore.

Capacity is limited, and is only viable if the supported slab remains connected to the structure.

US&R SHORING OPERATIONS GUIDE
CONSTRUCTING VERTICAL SHORING SYSTEMS

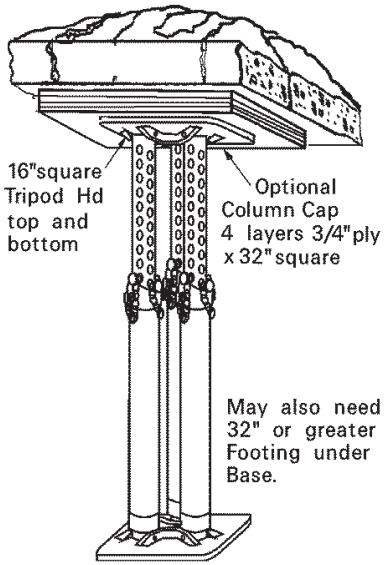

3-STRUT COLUMN
Uses 3 pneumatic struts with specially manufactured cap and foot.
Cap and Base may need wood cribbing or multi-layers of plywood to spread the load.

Shore capacity may be based on the length of the struts as given in the table in Section 7.

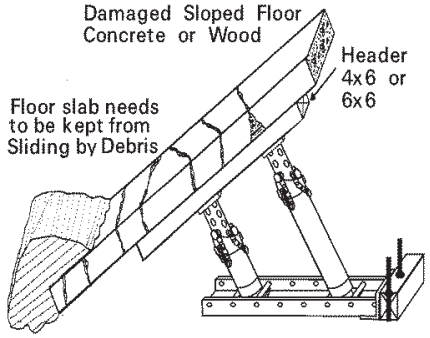

SLOPED FLOOR SHORE
Uses a minimum of 2-pneumatic struts, and is a Temporary, Spot Shore.

Capacity is limited, and is only viable if the supported slab remains connected to the structure.

2-56

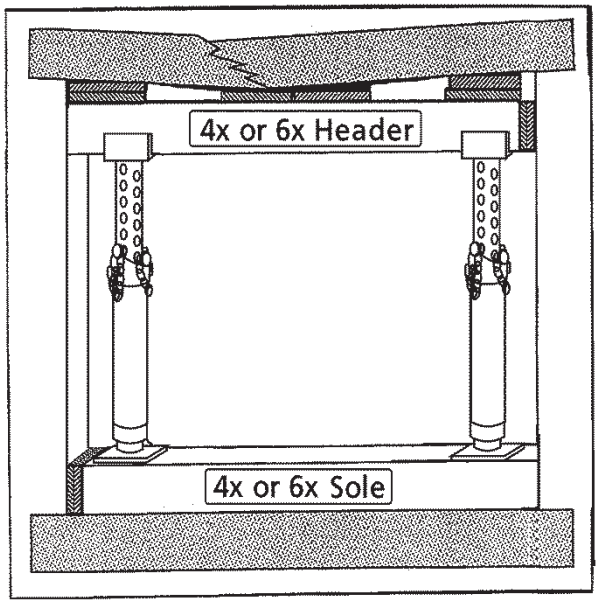

WINDOW OR DOOR SHORE

This shore uses 2-pneumatic struts with wood header / sole. It would be used as a temporary shore when wood posts were not available.

Shore capacity would be based on the size and strength of the wood header.
A qualified Structures Specialist should be consulted if a strength of more than 2,000lb to support the opening is needed.

US&R SHORING OPERATIONS GUIDE
CONSTRUCTING VERTICAL SHORING SYSTEMS

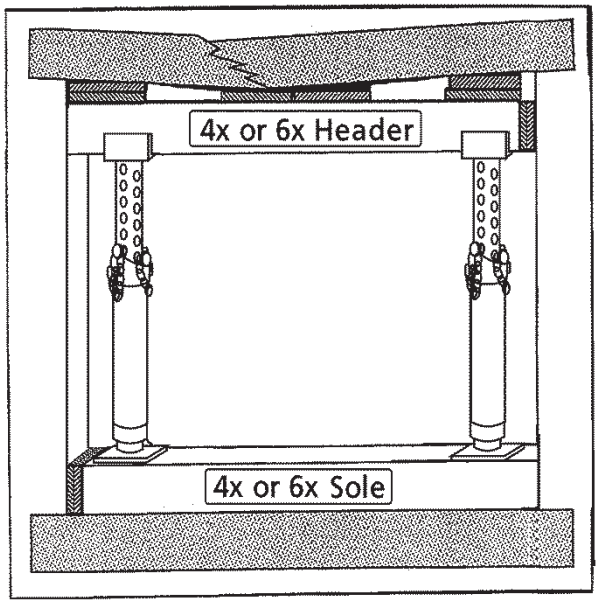

2

WINDOW OR DOOR SHORE

This shore uses 2-pneumatic struts with wood header / sole. It would be used as a temporary shore when wood posts were not available.

Shore capacity would be based on the size and strength of the wood header.
A qualified Structures Specialist should be consulted if a strength of more than 2,000lb to support the opening is needed.

2-57

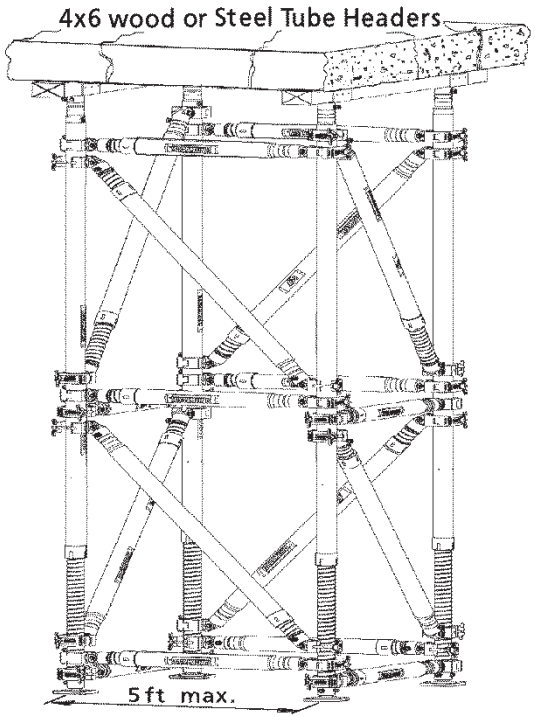

LACED POST SHORE
This shore uses 4-pneumatic struts with wood header. Each strut will need a metal, manufactured base.

This shore should only be used when it is specified and supervised by a qualified Structures Specialist, and he or she should determine the capacity.

All horizontal and diagonal members must be special struts that are capable of resisting tension and compression.

US&R SHORING OPERATIONS GUIDE
CONSTRUCTING VERTICAL SHORING SYSTEMS

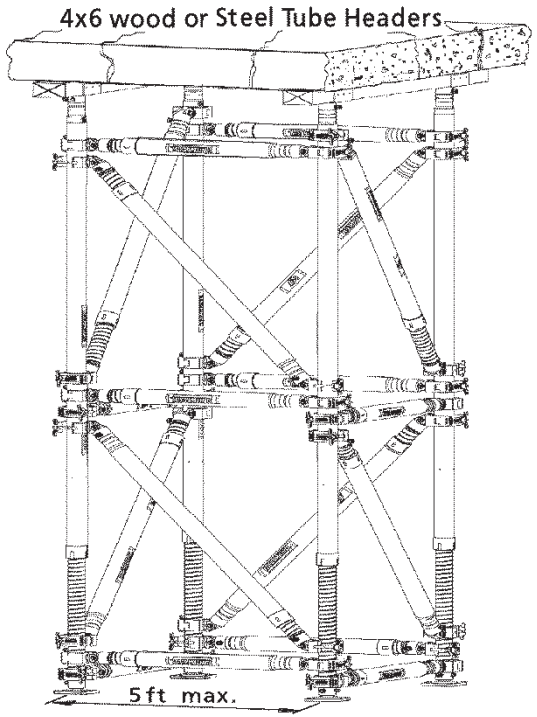

LACED POST SHORE
This shore uses 4-pneumatic struts with wood header. Each strut will need a metal, manufactured base.

This shore should only be used when it is specified and supervised by a qualified Structures Specialist, and he or she should determine the capacity.

All horizontal and diagonal members must be special struts that are capable of resisting tension and compression.

2-58

INTRODUCTION to SECTION 3

This section contains General Information, Graphics and Detailed Explanations of how to construct FEMA Raker and Horizontal Shoring – arranged as follows:

- Raker Shore – General Information
  - Types of Rakers page 3-2
  - Raker Cleats & Gussets 3-3
  - How to determine Raker Angle & Length 3-4
  - Raker Shore Bracing 3-6
  - Backing for Rakers at Special Walls, & Raker Splice 3-8
  - Trough Base and Sole Anchor 3-9
  - Use of Framing Square 3-10
- How to construct Raker Shores 3-11
  - Flying Raker – Spot Shore 3-12
  - Raker with backing for Wood or Masonry Walls 3-15
  - Solid Sole Raker 3-16
  - Split Sole Raker 3-20
  - Double Raker 3-23
  - Alternate – Using 3-2x4 studs to build Rakers 3-25
- How to construct Horizontal Shores 3-26
- Tiebacks and Alternate Raker Systems 3-29
- Pneumatic Strut Systems: Horizontal & Raker Shores 3-31

Note: See Sect 2 for Size-up, and General Information and Shoring Details.

US&R SHORING OPERATIONS GUIDE
CONSTRUCTING LATERAL SHORING SYSTEMS

INTRODUCTION to SECTION 3

This section contains General Information, Graphics and Detailed Explanations of how to construct FEMA Raker and Horizontal Shoring – arranged as follows:

- Raker Shore – General Information
  - Types of Rakers page 3-2
  - Raker Cleats & Gussets 3-3
  - How to determine Raker Angle & Length 3-4
  - Raker Shore Bracing 3-6
  - Backing for Rakers at Special Walls, & Raker Splice 3-8
  - Trough Base and Sole Anchor 3-9
  - Use of Framing Square 3-10
- How to construct Raker Shores 3-11
  - Flying Raker – Spot Shore 3-12
  - Raker with backing for Wood or Masonry Walls 3-15
  - Solid Sole Raker 3-16
  - Split Sole Raker 3-20
  - Double Raker 3-23
  - Alternate – Using 3-2x4 studs to build Rakers 3-25
- How to construct Horizontal Shores 3-26
- Tiebacks and Alternate Raker Systems 3-29
- Pneumatic Strut Systems: Horizontal & Raker Shores 3-31

3

Note: See Sect 2 for Size-up, and General Information and Shoring Details.

3-1

RAKER SHORES: GENERAL INFORMATION

Description:
Used in search and rescue incidents to stabilize leaning and/or damaged walls. There are 3 types: Flying, Solid Sole and Split Sole. All have unique characteristics.
Material List: See each individual system.

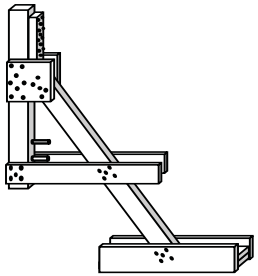

Raker: Flying (Friction)
Temporary, spot rakers when debris are piled next to the base of the wall.

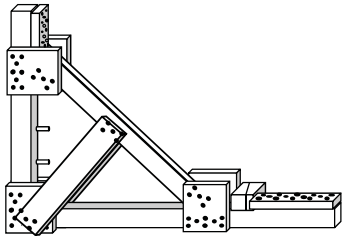

Raker: Solid Sole (Full Triangle)
Most desirable rakers, are normally built in groups of 2 or more as Class 3 Systems with lateral bracing.

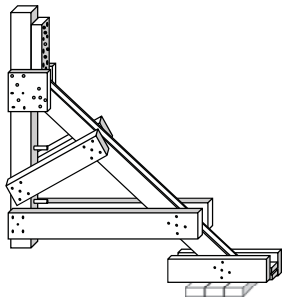

Raker: Split Sole
Intended to be used when there is soil adjacent to the wall, and/or there is a limited amount of debris next to the wall. Build as Class 3 Systems.

US&R SHORING OPERATIONS GUIDE
CONSTRUCTING LATERAL SHORING SYSTEMS

RAKER SHORES: GENERAL INFORMATION

Description:
Used in search and rescue incidents to stabilize leaning and/or damaged walls. There are 3 types: Flying, Solid Sole and Split Sole. All have unique characteristics.
Material List: See each individual system.

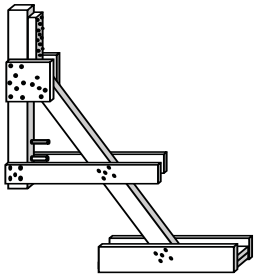

Raker: Flying (Friction)
Temporary, spot rakers when debris are piled next to the base of the wall.

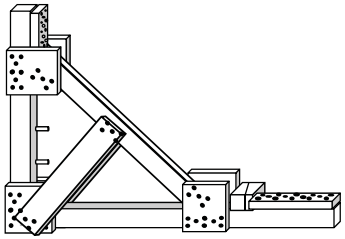

Raker: Solid Sole (Full Triangle)
Most desirable rakers, are normally built in groups of 2 or more as Class 3 Systems with lateral bracing.

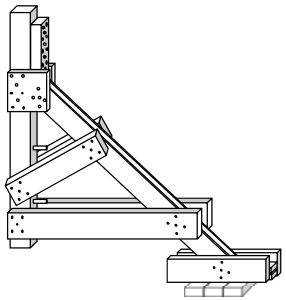

Raker: Split Sole
Intended to be used when there is soil adjacent to the wall, and/or there is a limited amount of debris next to the wall. Build as Class 3 Systems.

3-2

RAKER SHORES: GENERAL INFORMATION

1. Raker Shores may be built in a progression, starting with Flying Raker, to stabilize the wall, followed by a group of Full Triangle Rakers (Since Full Triangle Rakers are mostly pre-fabricated, they may be installed without first installing Flying Rakers).

2. <u>Top Cleat for 4 x 4 Raker.</u>

- 24 inches with 14 – 16d nails for 45 degree rakers.

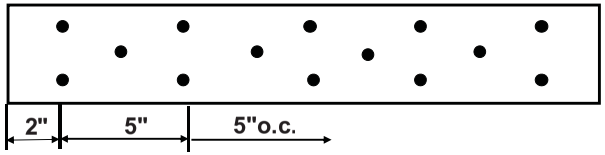

- 30 inches with 20 - 16d nails for 60 degree rakers.

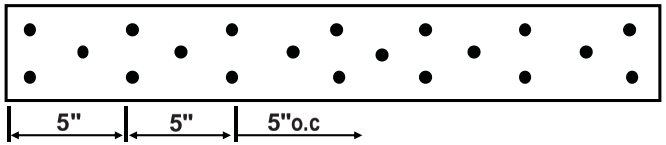

3. **<u>Top Cleat for 6 x 6 Raker</u>**:

- 24 inches with 20 – 16d nails for 45 degree rakers.
- 30 inches with 29 - 16d nails for 60 degree rakers.

4. <u>Bottom Cleat:</u>

- 24 inches with 14 – 16d nails for 4 x 4 rakers.
- 24 inches with 20 - 16d nails for 6 x 6 rakers.

5. **Plywood gussets**: 5/8" or 3/4" (OSB if not wet area).

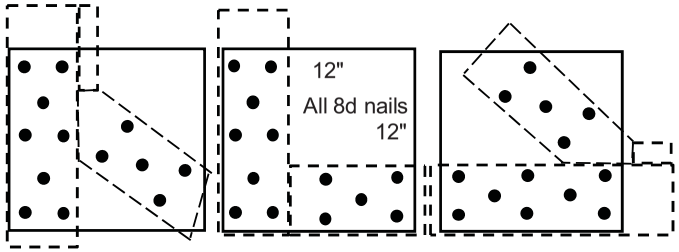

Top of Raker Bottom of Raker Rear of Raker

6. **Sole Anchor**: All rakers need a Sole Anchor. (shown later)

3

US&R SHORING OPERATIONS GUIDE
CONSTRUCTING LATERAL SHORING SYSTEMS

RAKER SHORES: GENERAL INFORMATION

1. Raker Shores may be built in a progression, starting with Flying Raker, to stabilize the wall, followed by a group of Full Triangle Rakers (Since Full Triangle Rakers are mostly pre-fabricated, they may be installed without first installing Flying Rakers).

2. Top Cleat for 4 x 4 Raker.

- 24 inches with 14 – 16d nails for 45 degree rakers.

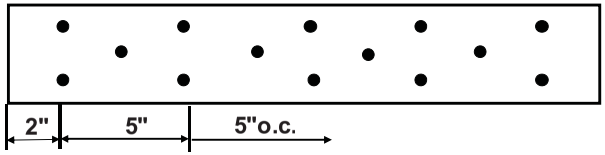

- 30 inches with 20 - 16d nails for 60 degree rakers.

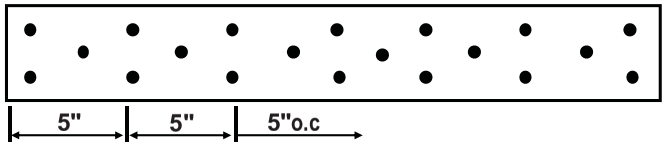

3. Top Cleat for 6 x 6 Raker:

- 24 inches with 20 – 16d nails for 45 degree rakers.
- 30 inches with 29 - 16d nails for 60 degree rakers.

4. Bottom Cleat:

- 24 inches with 14 – 16d nails for 4 x 4 rakers.
- 24 inches with 20 - 16d nails for 6 x 6 rakers.

5. Plywood gussets: 5/8" or 3/4" (OSB if not wet area).

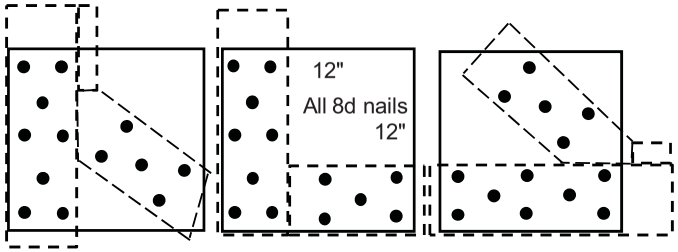

Top of Raker Bottom of Raker Rear of Raker

6. Sole Anchor: All rakers need a Sole Anchor. (shown later)

3-3

3

DETERMINING RAKER SHORE ANGLE & LENGTH

1. Any angle between 30 and 60 degrees will work effectively.

- The lower the angle, the more efficient the raker will be.

2. The two most common angles used are 45 and 60 degrees. A 60 degree angle is the maximum recommended angle used to safely erect a raker shore.
3. Determining the height at which the raker shore needs to intersect the wall (**Insertion Point**) will identify the angle to work best with the available lengths of lumber. A 45 degree angle raker shore requires longer lumber than a 60 degree Raker.

- The **Insertion Point** for a Wood Bldg should be between the Top of the Floor Joist and 2 feet below that point.

4. The length of a 45-degree angle raker shore: Height of the raker shore support point in feet multiplied by 17 will give the length of the raker, tip to tip, in inches. (8' X 17 = 136" or 11' 4").
5. The length of a 60-degree angle raker shore: Height of the raker shore support point in feet multiplied by 14 will give the length of the raker, tip to tip, in inches (8' X 14 = 112" or 9' 4").

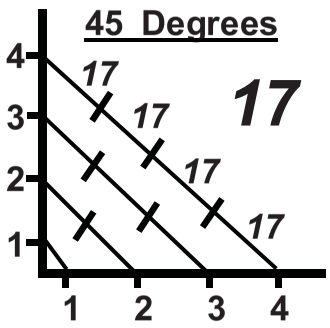

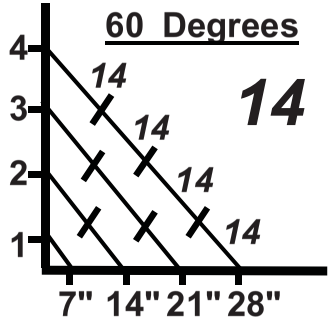

US&R SHORING OPERATIONS GUIDE
CONSTRUCTING LATERAL SHORING SYSTEMS

DETERMINING RAKER SHORE ANGLE & LENGTH

1. Any angle between 30 and 60 degrees will work effectively.

- The lower the angle, the more efficient the raker will be.

2. The two most common angles used are 45 and 60 degrees. A 60 degree angle is the maximum recommended angle used to safely erect a raker shore.
3. Determining the height at which the raker shore needs to intersect the wall (**Insertion Point**) will identify the angle to work best with the available lengths of lumber. A 45 degree angle raker shore requires longer lumber than a 60 degree Raker.

- The **Insertion Point** for a Wood Bldg should be between the Top of the Floor Joist and 2 feet below that point.

4. The length of a 45-degree angle raker shore: Height of the raker shore support point in feet multiplied by 17 will give the length of the raker, tip to tip, in inches. (8' X 17 = 136" or 11' 4").
5. The length of a 60-degree angle raker shore: Height of the raker shore support point in feet multiplied by 14 will give the length of the raker, tip to tip, in inches (8' X 14 = 112" or 9' 4").

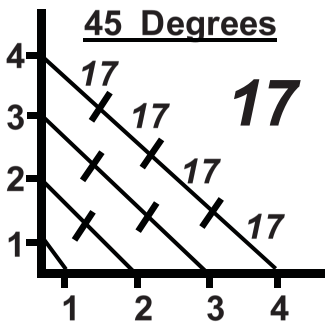

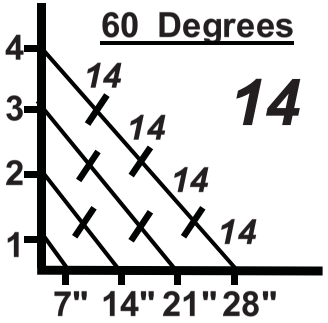

3-4

RAKER LENGTH BASED ON INSERTION POINT HEIGHT

Insertion Point	45° Raker L Inches / Feet	60° Raker L Inches / Feet	60° Horiz. Dist. Inches / Feet
3 ft	51" / 4'- 3"	42" / 3'- 6"	21" / 1'-9"
4	68" / 5'- 8"	56" / 4'- 8"	28" / 2'-4"
5	85" / 7'-1"	70" / 5'- 10"	35" / 2'-11"
6	102" / 8'- 6"	84" / 7'- 0"	42" / 3'-6"
7	119" / 9'- 11"	98" / 8'- 2"	49" / 4'-1"
8	136" / 11'- 4"	112" / 9'- 4"	56" / 4'-8"
9	153" / 12'- 9"	126" / 10'- 6"	63" / 5'-3"
10	170" / 14'- 2"	140" / 11'- 8"	70" / 5'-10"
11	187" / 15'- 7"	154" / 12'- 10"	77"/ 6'-5"
12	204" / 17'- 0"	168" / 14'- 0"	84"/ 7'-0"
13	221" / 18'- 5"	182" / 15'- 2"	91" / 7'-7"
14	238" / 19'- 10"	196"/ 16'- 4"	98" /8'-2"
15	255" / 21'- 3"	210" / 17'- 6"	105"/ 8'-9"
16	272" / 22'- 8"	224" / 18'- 8"	112"/ 9'-4"
17	289" / 24'- 1"	238" / 19'- 10"	119"/ 9'-11"
18	306" / 25'- 6"	252" / 21'- 0"	126"/ 10'-6"
19	323" / 26'- 11"	266" / 22'- 2"	133"/ 11'-1"
20 ft	340"/ 28'- 4"	280" / 23'- 4"	140"/ 11'-8"

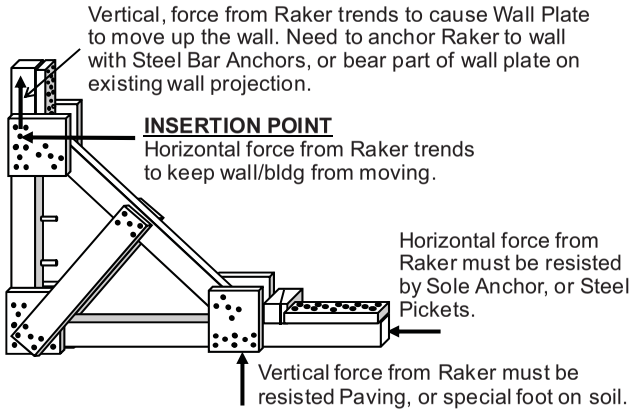

FORCES in RAKER SHORES

US&R SHORING OPERATIONS GUIDE
CONSTRUCTING LATERAL SHORING SYSTEMS

RAKER LENGTH BASED ON INSERTION POINT HEIGHT

Insertion Point	45° Raker L Inches / Feet	60° Raker L Inches / Feet	60° Horiz. Dist. Inches / Feet
3 ft	51" / 4'- 3"	42" / 3'- 6"	21" / 1'-9"
4	68" / 5'- 8"	56" / 4'- 8"	28" / 2'-4"
5	85" / 7'-1"	70" / 5'- 10"	35" / 2'-11"
6	102" / 8'- 6"	84" / 7'- 0"	42" / 3'-6"
7	119" / 9'- 11"	98" / 8'- 2"	49" / 4'-1"
8	136" / 11'- 4"	112" / 9'- 4"	56" / 4'-8"
9	153" / 12'- 9"	126" / 10'- 6"	63" / 5'-3"
10	170" / 14'- 2"	140" / 11'- 8"	70" / 5'-10"
11	187" / 15'- 7"	154" / 12'- 10"	77"/ 6'-5"
12	204" / 17'- 0"	168" / 14'- 0"	84"/ 7'-0"
13	221" / 18'- 5"	182" / 15'- 2"	91" / 7'-7"
14	238" / 19'- 10"	196"/ 16'- 4"	98" /8'-2"
15	255" / 21'- 3"	210" / 17'- 6"	105"/ 8'-9"
16	272" / 22'- 8"	224" / 18'- 8"	112"/ 9'-4"
17	289" / 24'- 1"	238" / 19'- 10"	119"/ 9'-11"
18	306" / 25'- 6"	252" / 21'- 0"	126"/ 10'-6"
19	323" / 26'- 11"	266" / 22'- 2"	133"/ 11'-1"
20 ft	340"/ 28'- 4"	280" / 23'- 4"	140"/ 11'-8"

3

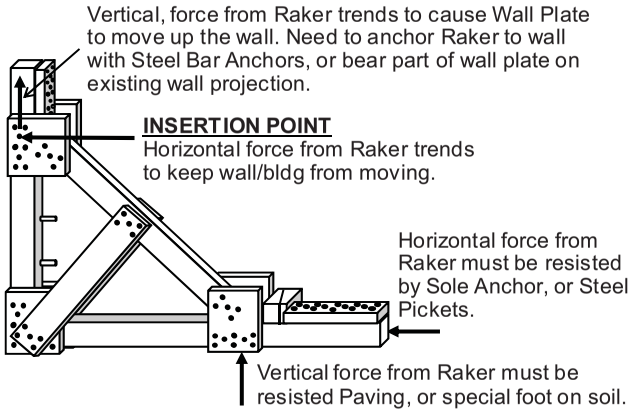

FORCES in RAKER SHORES

3-5

RAKER SHORES: Multi-Shore Bracing, Backing, Raker Splice and Anchoring

Most all raker installations have multiple numbers of shores that are constructed along a damaged/leaning wall. This section will show information about:

- Bracing between rakers
- Backing against wall and Raker Splice
- Trough Base and Sole Anchors

Material List: See each individual system.

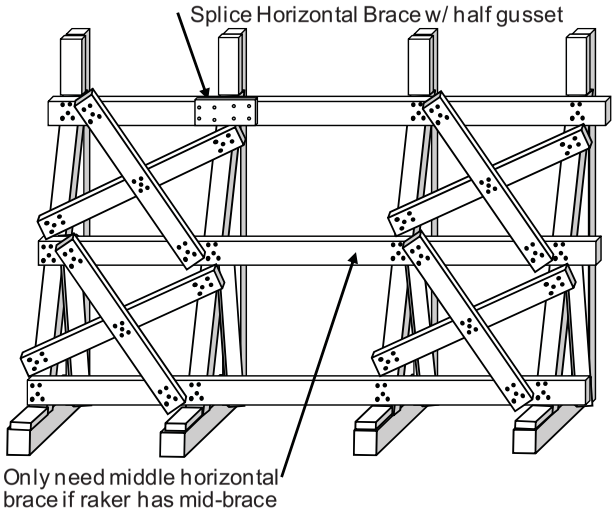

This is an example of a four raker system, when the rakers have a mid-brace. X bracing is shown, but V bracing may be used. Normally the X bracing should be installed between the end pair of rakers. X bracing should be no more than 40 feet on center.

Place the first diagonal of each set directly against the raker. Place the second diagonal so that it nails to the horizontal braces just adjacent to where the horizontal nails to the rakers. (No nails directly over other nails).

US&R SHORING OPERATIONS GUIDE
CONSTRUCTING LATERAL SHORING SYSTEMS

RAKER SHORES: Multi-Shore Bracing, Backing, Raker Splice and Anchoring

Most all raker installations have multiple numbers of shores that are constructed along a damaged/leaning wall. This section will show information about:

- Bracing between rakers
- Backing against wall and Raker Splice
- Trough Base and Sole Anchors

Material List: See each individual system.

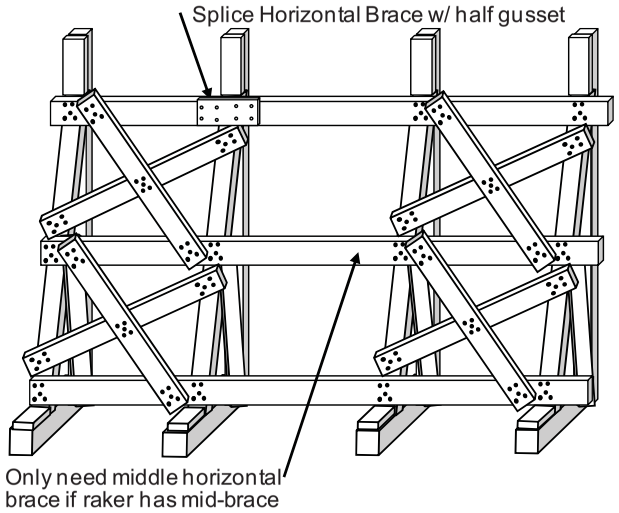

This is an example of a four raker system, when the rakers have a mid-brace. X bracing is shown, but V bracing may be used. Normally the X bracing should be installed between the end pair of rakers. X bracing should be no more than 40 feet on center.

Place the first diagonal of each set directly against the raker. Place the second diagonal so that it nails to the horizontal braces just adjacent to where the horizontal nails to the rakers. (No nails directly over other nails).

3-6

BRACING BETWEEN RAKERS

1. Rakers are normally spaced at 8 feet on center maximum. However, actual conditions may require closer spacing.
2. Lateral Bracing between rakers is normally built using 2x6 horizontals and X-bracing.
3. Depending on height of insertion point, rakers may have mid-bracing to reduce to potential of buckling. In this case the lateral bracing will have a horizontal placed near the intersection of mid-brace and raker, and there will be two levels of X-bracing.
4. Horizontal Bracing: 2 x 6 or 2-2x4.

- Butt splice at center of raker. Preferred if 16ft long.
- 3 – 16d nails at each horizontal brace to each raker.
- Cover each splice with Half Gusset, 8-8d.

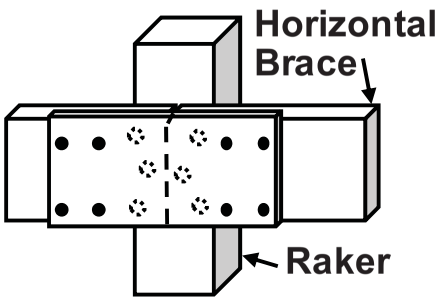

5. Middle Horizontal Bracing: (If raker has mid-point brace).

- 4 x 4 raker: required if length of raker > 11 feet.
- 6 x 6 raker: required if length of raker > 16 feet.

6. Diagonal Bracing

- “X” bracing: Use 2 x 6 or 2-2x4 (side by side). Allow no more than 32 ft (4 bays) between bracing bays. 5-16d each end each brace, and where they cross. (X-bracing 40 ft max o.c.)
- “V” bracing: Same as “X” bracing, but one member of the “X” is placed on the next bay. Allow no more than three un-braced bays between a “V” brace. (40 ft max. o.c.)

US&R SHORING OPERATIONS GUIDE
CONSTRUCTING LATERAL SHORING SYSTEMS

BRACING BETWEEN RAKERS

1. Rakers are normally spaced at 8 feet on center maximum. However, actual conditions may require closer spacing.
2. Lateral Bracing between rakers is normally built using 2x6 horizontals and X-bracing.
3. Depending on height of insertion point, rakers may have mid-bracing to reduce to potential of buckling. In this case the lateral bracing will have a horizontal placed near the intersection of mid-brace and raker, and there will be two levels of X-bracing.
4. Horizontal Bracing: 2 x 6 or 2-2x4.

- Butt splice at center of raker. Preferred if 16ft long.
- 3 – 16d nails at each horizontal brace to each raker.
- Cover each splice with Half Gusset, 8-8d.

3

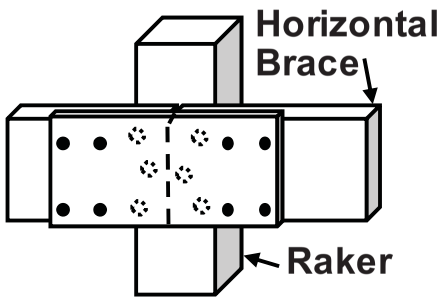

5. Middle Horizontal Bracing: (If raker has mid-point brace).

- 4 x 4 raker: required if length of raker > 11 feet.
- 6 x 6 raker: required if length of raker > 16 feet.

6. Diagonal Bracing

- “X” bracing: Use 2 x 6 or 2-2x4 (side by side). Allow no more than 32 ft (4 bays) between bracing bays. 5-16d each end each brace, and where they cross. (X-bracing 40 ft max o.c.)
- “V” bracing: Same as “X” bracing, but one member of the “X” is placed on the next bay. Allow no more than three un-braced bays between a “V” brace. (40 ft max. o.c.)

3-7

BACKING for RAKERS at SPECIAL WALLS (see page 3-15)

1. For concrete or masonry walls, spreaders may be needed between wall plate and wall if wall is badly cracked.

- Alternate 1: 1 piece of plywood, 4 ft x 4 ft x 3/4", with the top at the insertion point, and centered (left to right) on the wall plate. Nail ply to wall plate with 16-16d nails.
- Alternate 2: Use full 4 ft x 8 ft sheet of plywood with the long direction placed vertical, If the wall is badly cracked for most of its height, Same nailing.
- Alternate 3: Use 2 sheets of 5/8" or 1/2" plywood, for Alt1 & 2 if thicker ply is not available. Same nailing.

2. For wood walls, place a 2 ft high x 3 ft wide x 3/4" or 5/8" sheet of plywood centered on the wall plate, with the top near the insertion point, and/or the floor/roof line of the structure.

- Nail backing plywood to wall plate with 16 -16d nails, equally spaced.
- Center raker on a stud, and nail backing into studs and/or edge of floor/roof with 8 – 16d nails on each side of raker. Note: need to take care to locate studs for walls with stucco finish.

RAKER SPLICE

1. Locate center of splice within one foot each side of where mid-point brace connects to raker.
2. Splice should be prefabricated on raker prior to assembling the raker shore.

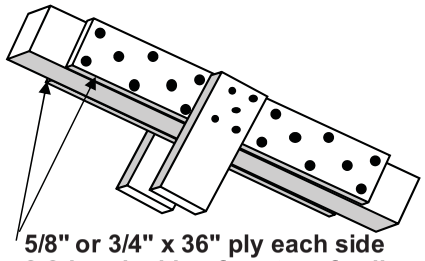

5/8" or 3/4" x 36" ply each side
8-8d each side of center of splice

US&R SHORING OPERATIONS GUIDE
CONSTRUCTING LATERAL SHORING SYSTEMS

BACKING for RAKERS at SPECIAL WALLS (see page 3-15)

1. For concrete or masonry walls, spreaders may be needed between wall plate and wall if wall is badly cracked.

- Alternate 1: 1 piece of plywood, 4 ft x 4 ft x 3/4", with the top at the insertion point, and centered (left to right) on the wall plate. Nail ply to wall plate with 16-16d nails.
- Alternate 2: Use full 4 ft x 8 ft sheet of plywood with the long direction placed vertical, If the wall is badly cracked for most of its height, Same nailing.
- Alternate 3: Use 2 sheets of 5/8" or 1/2" plywood, for Alt1 & 2 if thicker ply is not available. Same nailing.

2. For wood walls, place a 2 ft high x 3 ft wide x 3/4" or 5/8" sheet of plywood centered on the wall plate, with the top near the insertion point, and/or the floor/roof line of the structure.

- Nail backing plywood to wall plate with 16 -16d nails, equally spaced.
- Center raker on a stud, and nail backing into studs and/or edge of floor/roof with 8 – 16d nails on each side of raker. Note: need to take care to locate studs for walls with stucco finish.

RAKER SPLICE

1. Locate center of splice within one foot each side of where mid-point brace connects to raker.
2. Splice should be prefabricated on raker prior to assembling the raker shore.

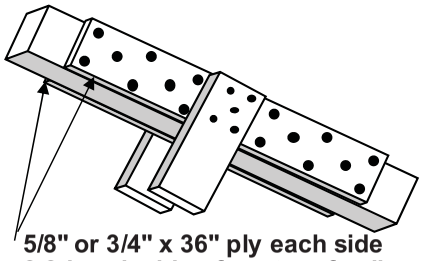

5/8" or 3/4" x 36" ply each side
8-8d each side of center of splice

3-8

TROUGH BASE

1. Used as base for Split Sole and Flying/Friction Raker.
2. Place 18" x 18" foot under Trough for bearing on soil.

Material List:
2– 2 x 6 x 36" side pieces. 7-16d to bottom each side and 5-16d to raker each side.
1 – 2 x 4 or 2 x 6 x 36" bottom piece (match raker width).
1 – 2 x 4 or 2 x 6 x 18" cleat (match raker width), and place flush with end. 5-16d to bottom.

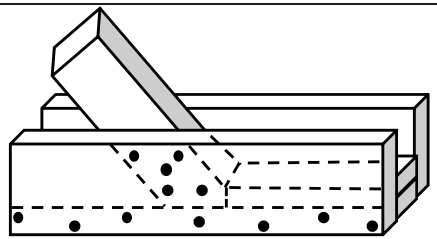

SOLE ANCHORS

3. Keeps rakers from moving away from wall. Length = 4ft min

- **Pickets** are 1" dia. x 36" min., Grade A-36 plain steel rods or Grade 60 rebar, driven a minimum of 24" into soil or paving.
- Use 4 x 4 or 6 x 6 with at least 2 pickets placed in pre-drilled holes through-it if high winds or aftershocks are possible.
- Pickets may be placed behind in other conditions, however the pre-drilled timber can act to guide pickets and keep them plumb.
- Use 2 x 4 or 4 x 4 wedges. May use 2 x 6 wedges against 6 x 6.
- Pickets per raker: Use 4 – into **Soil** & 2 into **Paving** (per raker).

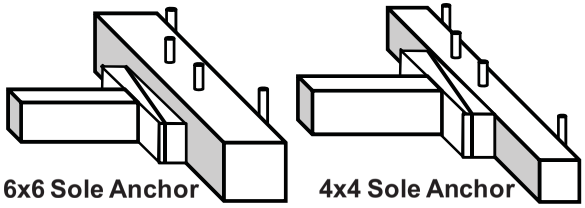

US&R SHORING OPERATIONS GUIDE
CONSTRUCTING LATERAL SHORING SYSTEMS

TROUGH BASE

1. Used as base for Split Sole and Flying/Friction Raker.
2. Place 18" x 18" foot under Trough for bearing on soil.

Material List:
2– 2 x 6 x 36" side pieces. 7-16d to bottom each side and 5-16d to raker each side.
1 – 2 x 4 or 2 x 6 x 36" bottom piece (match raker width).
1 – 2 x 4 or 2 x 6 x 18" cleat (match raker width), and place flush with end. 5-16d to bottom.

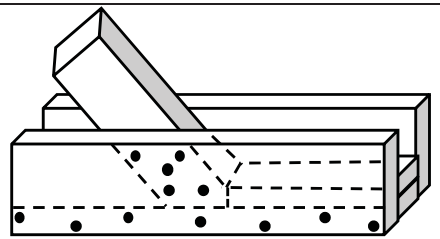

3

SOLE ANCHORS

3. Keeps rakers from moving away from wall. Length = 4ft min

- **Pickets** are 1" dia. x 36" min., Grade A-36 plain steel rods or Grade 60 rebar, driven a minimum of 24" into soil or paving.
- Use 4 x 4 or 6 x 6 with at least 2 pickets placed in pre-drilled holes through-it if high winds or aftershocks are possible.
- Pickets may be placed behind in other conditions, however the pre-drilled timber can act to guide pickets and keep them plumb.
- Use 2 x 4 or 4 x 4 wedges. May use 2 x 6 wedges against 6 x 6.
- Pickets per raker: Use 4 – into **Soil** & 2 into **Paving** (per raker).

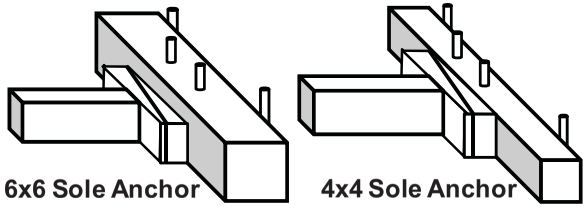

3-9

US&R SHORING OPERATIONS GUIDE
CONSTRUCTING LATERAL SHORING SYSTEMS
(May use two pickets per raker at paving)

USING STEEL FRAMING SQUARE

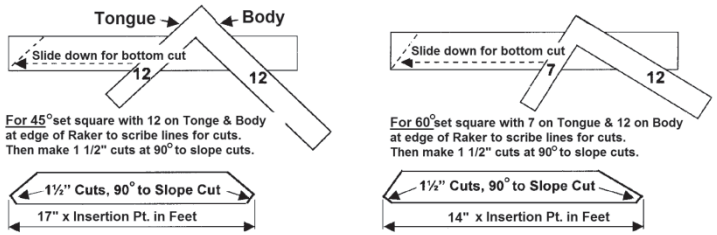

TO SCRIBE THE CUT ANGLE ON A RAKE

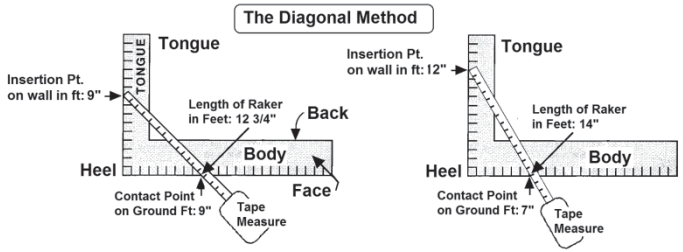

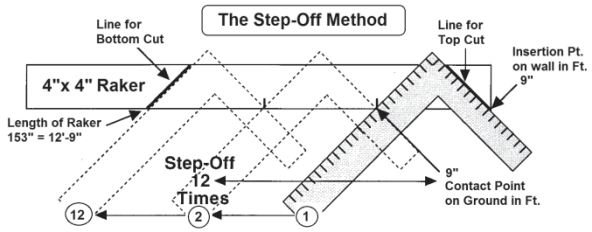

TO DETERMINE THE APPROXIMATE LENGTH OF A RAKE

US&R SHORING OPERATIONS GUIDE
CONSTRUCTING LATERAL SHORING SYSTEMS
(May use two pickets per raker at paving)

USING STEEL FRAMING SQUARE

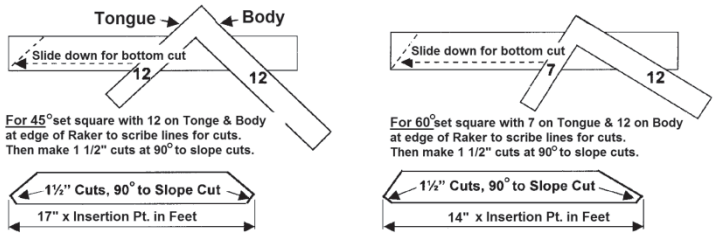

TO SCRIBE THE CUT ANGLE ON A RAKE

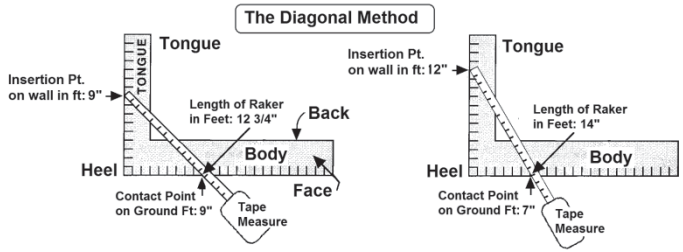

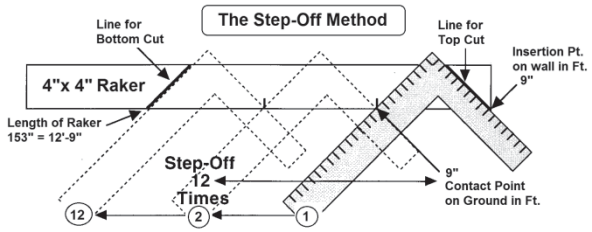

TO DETERMINE THE APPROXIMATE LENGTH OF A RAKE

HOW TO CONSTRUCT RAKER SHORES:

Flying Raker – Spot Shore page 3-12
Raker With Backing For Walls 3-15
Solid Sole Raker 3-16
Split Sole Raker 3-20
Double Raker 3-23
Alternate-Using 3-2x4 Studs for Rakers 3-25

HOW TO CONSTRUCT OTHER LATERAL SHORES:

Horizontal Shores page 3-26
Tiebacks 3-29
Raker Shores Using Pneumatic Struts 3-31

US&R SHORING OPERATIONS GUIDE
CONSTRUCTING LATERAL SHORING SYSTEMS

HOW TO CONSTRUCT RAKER SHORES:

Flying Raker – Spot Shore page 3-12
Raker With Backing For Walls 3-15
Solid Sole Raker 3-16
Split Sole Raker 3-20
Double Raker 3-23
Alternate-Using 3-2x4 Studs for Rakers 3-25

HOW TO CONSTRUCT OTHER LATERAL SHORES:

Horizontal Shores page 3-26
Tiebacks 3-29
Raker Shores Using Pneumatic Struts 3-31

3

3-11

FLYING RAKER (Friction) SHORE (Lateral Class 1)

Rapidly installed shore that is best used as an initial shore, until a more reliable raker system can be installed. It can be erected next to a wall without removing debris.	
Material List:	
4 x 4 x 6ft Wall Plate	One 2 x 4 x 24” Cleat
One 4 x 4 Raker	1 – 2 x 4 or 4 x 4 Wedge Set
2 – 2 x 6 x 48” Braces	2 -1/2" drill-in wall plate anchors
Trough Base (see pg 3-9) Sole Anchor with 2 – 1" x 36" Pickets	

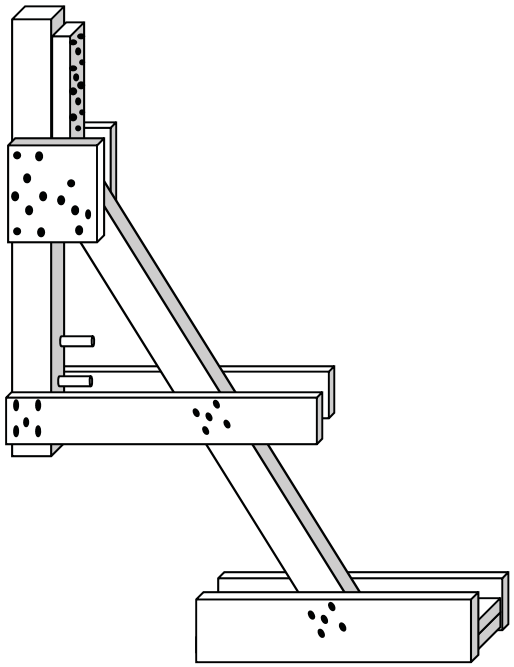

Design Load is 1,000lb per Raker

US&R SHORING OPERATIONS GUIDE
CONSTRUCTING LATERAL SHORING SYSTEMS

FLYING RAKER (Friction) SHORE (Lateral Class 1)

Rapidly installed shore that is best used as an initial shore, until a more reliable raker system can be installed. It can be erected next to a wall without removing debris.	
Material List:	
4 x 4 x 6ft Wall Plate	One 2 x 4 x 24” Cleat
One 4 x 4 Raker	1 – 2 x 4 or 4 x 4 Wedge Set
2 – 2 x 6 x 48” Braces	2 -1/2" drill-in wall plate anchors
Trough Base (see pg 3-9) Sole Anchor with 2 – 1" x 36" Pickets	

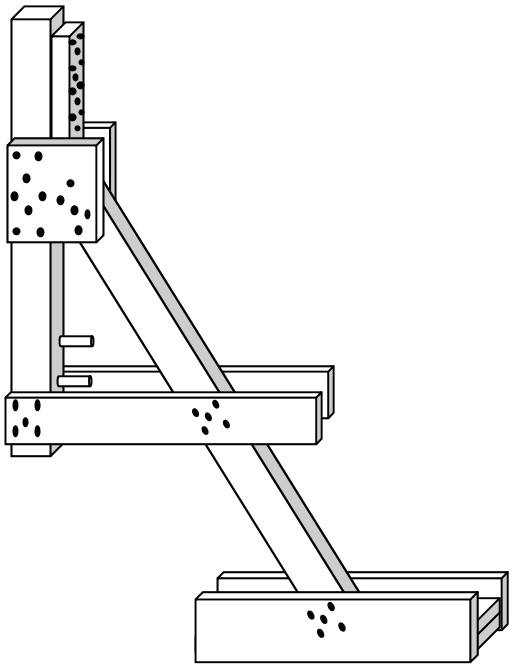

Design Load is 1,000lb per Raker

3-12

HOW TO CONSTRUCT THE FLYING RAKER

1. The area adjacent to where walls need support by rakers should be considered as very hazardous. Pre-construct each Flying Raker beyond the fall zone, and do not attempt to remove any debris that has fallen next to the damaged wall.
2. Determine where to erect the Flying Raker and the height required to support the wall. Determine height of Insertion Point.

- Flying Rakers may be used as single, spot shores, or may be built in pairs with horizontal & X bracing between them.

3. Flying Raker order of construction outline is as follows:

- In order to pre-fabricate, Cut Raker, Wall Plate and Bottom Brace to proper length, and perform angle cuts on Raker.
- Prefabricate the Shore, Trough Base, & Anchor. (page 3-9)
- Fit the shore into the Trough Base.
- Place the Anchor for the Trough.
- Install wedge and/or shims.
- Attach to wall with 1/2" drill-in anchors (or nails for wood walls).
- Retighten the wedges.

4. Layout Wall Plate, Raker and Bottom Brace at selected angle, and toe-nail Raker to Wall Plate. (60 or 45 degree angle OK)
5. Nail-on Top Cleat, then gusset to one side of this joint.
6. Nail one-Bottom Brace to Wall Plate in position to clear debris, but only tack-nail it to Raker.
7. Turn shore over and nail-on other gusset plus other Bottom Brace. (nailed to Wall Plate, tack to Raker)
8. Anchor the Trough, then carry the partly assembled Raker into place. Snug-up the Wedges, and complete the nailing of Bottom Brace to Raker. See page 3-9 for sole anchor.
9. Make whatever connection to wall that is selected, see ADDITIONAL INFORMATION.
10. Retighten the Wedges.

US&R SHORING OPERATIONS GUIDE
CONSTRUCTING LATERAL SHORING SYSTEMS

HOW TO CONSTRUCT THE FLYING RAKER

1. The area adjacent to where walls need support by rakers should be considered as very hazardous. Pre-construct each Flying Raker beyond the fall zone, and do not attempt to remove any debris that has fallen next to the damaged wall.
2. Determine where to erect the Flying Raker and the height required to support the wall. Determine height of Insertion Point.

- Flying Rakers may be used as single, spot shores, or may be built in pairs with horizontal & X bracing between them.

3. Flying Raker order of construction outline is as follows:

- In order to pre-fabricate, Cut Raker, Wall Plate and Bottom Brace to proper length, and perform angle cuts on Raker.
- Prefabricate the Shore, Trough Base, & Anchor. (page 3-9)
- Fit the shore into the Trough Base.
- Place the Anchor for the Trough.
- Install wedge and/or shims.
- Attach to wall with 1/2" drill-in anchors (or nails for wood walls).
- Retighten the wedges.

4. Layout Wall Plate, Raker and Bottom Brace at selected angle, and toe-nail Raker to Wall Plate. (60 or 45 degree angle OK)
5. Nail-on Top Cleat, then gusset to one side of this joint.
6. Nail one-Bottom Brace to Wall Plate in position to clear debris, but only tack-nail it to Raker.
7. Turn shore over and nail-on other gusset plus other Bottom Brace. (nailed to Wall Plate, tack to Raker)
8. Anchor the Trough, then carry the partly assembled Raker into place. Snug-up the Wedges, and complete the nailing of Bottom Brace to Raker. See page 3-9 for sole anchor.
9. Make whatever connection to wall that is selected, see ADDITIONAL INFORMATION.
10. Retighten the Wedges.

3

3-13

ADDITIONAL INFORMATION

1. The areas to be supported by Raker Shores should be considered extremely dangerous.
2. They may be used as singles spot shores, or may be built in pairs with horizontal and X bracing added between pairs.
3. To attach wall plate directly to concrete/masonry wall use 1/2" drill-in anchors as noted below:

- Place a minimum of two 1/2" x 8 ½" wedge anchors, or 1/2" x 8" long rebars or smooth bars (4" min embed in wall) through wall plate for 45 deg rakers. Use 3 anchors for 60 deg rakers.
- At concrete walls, if 3/4" plywood backing is needed, attached it to wall plate with 16-16d nails, and use at least two 1/2" x 5 ½" wedge anchors, or 1/2" x 8" rebar/smooth bars through backing into concrete wall (4" min embed) each side of Raker.

4. To attach the wall plate directly to a wood framed wall.

- Use 2 ft high x 3ft wide x 3/4"or 5/8" ply backing nailed with 16-16d to the wall plate. Center raker on a stud, and use at least 8-16d nails through the backing material into studs and/or edge of floor, each side of Raker.

5. In some cases the drill-ins may be omitted if the top of the Wall Plate can bear against a protrusion in brick/concrete wall. **Do not rely on friction.**
6. At brick/concrete wall, raker may be built at one edge of a window, with a single or double 2x4 (24" min w/14-16d) pre-nailed to the Wall Plate so it will bear on the bottom of window header (Only if header is not badly cracked).
7. Use a Trough Base and a sole anchor, see page 3-9.
8. A Sole Anchor can be secured to the ground or floor behind the sole plate to prevent movement of the sole plate.

- Timber Anchors should be as least 4x4 size lumber, (6x6 is better). Place 4 – 1" diameter x 36" min. pickets, spaced about 12" on center, directly behind anchor on soil. Two pickets may be used into concrete or paving. See page 3-9
- Concrete curbs, walls and other nearby secure structures may also be used.

US&R SHORING OPERATIONS GUIDE
CONSTRUCTING LATERAL SHORING SYSTEMS

ADDITIONAL INFORMATION

1. The areas to be supported by Raker Shores should be considered extremely dangerous.
2. They may be used as singles spot shores, or may be built in pairs with horizontal and X bracing added between pairs.
3. To attach wall plate directly to concrete/masonry wall use 1/2" drill-in anchors as noted below:

- Place a minimum of two 1/2" x 8 ½" wedge anchors, or 1/2" x 8" long rebars or smooth bars (4" min embed in wall) through wall plate for 45 deg rakers. Use 3 anchors for 60 deg rakers.
- At concrete walls, if 3/4" plywood backing is needed, attached it to wall plate with 16-16d nails, and use at least two 1/2" x 5 ½" wedge anchors, or 1/2" x 8" rebar/smooth bars through backing into concrete wall (4" min embed) each side of Raker.

4. To attach the wall plate directly to a wood framed wall.

- Use 2 ft high x 3ft wide x 3/4"or 5/8" ply backing nailed with 16-16d to the wall plate. Center raker on a stud, and use at least 8-16d nails through the backing material into studs and/or edge of floor, each side of Raker.

5. In some cases the drill-ins may be omitted if the top of the Wall Plate can bear against a protrusion in brick/concrete wall. **Do not rely on friction.**
6. At brick/concrete wall, raker may be built at one edge of a window, with a single or double 2x4 (24" min w/14-16d) pre-nailed to the Wall Plate so it will bear on the bottom of window header (Only if header is not badly cracked).
7. Use a Trough Base and a sole anchor, see page 3-9.
8. A Sole Anchor can be secured to the ground or floor behind the sole plate to prevent movement of the sole plate.

- Timber Anchors should be as least 4x4 size lumber, (6x6 is better). Place 4 – 1" diameter x 36" min. pickets, spaced about 12" on center, directly behind anchor on soil. Two pickets may be used into concrete or paving. See page 3-9
- Concrete curbs, walls and other nearby secure structures may also be used.

3-14

RAKER BACKING – USED WHEN SUPPORTING WOOD WALLS

See page 3-8 for detail information including nailing.

- The plywood backing shown may be also used with Split Sole and Flying Rakers.
- Plywood is 24" high x 36" wide x 3/4" or 5/8" thick.
- Nail 16-16d from ply into back of wall plate, and 8-16d each side of raker into studs and/or edge of floor.
- The top of the plywood backing should be placed at the Insertion Point. Center Raker on a stud.

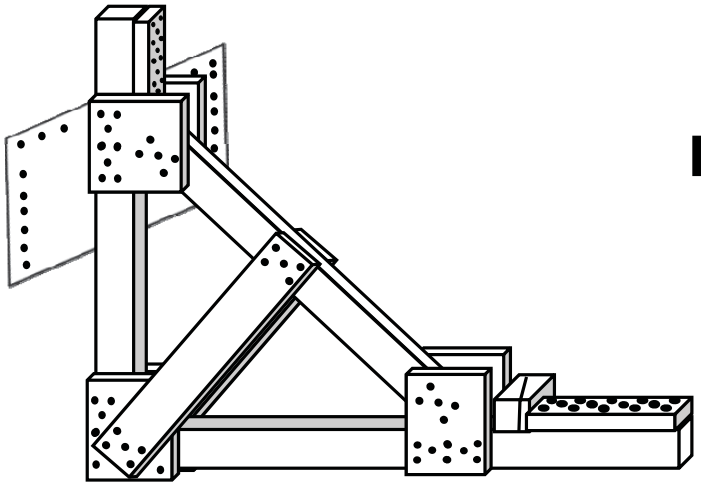

Raker Backing – Used when supporting badly cracked Concrete and Masonry Walls

- Plywood is 48" high (minimum) x 48" wide x 3/4" thick.
- Nail 16-16d from ply into back of wall plate.
- Connect Raker to wall using 2 or more 1/2" x 5 ½" wedge anchors, or 1/2" x 8" rebars (or smooth steel bars) through the backing material into the concrete wall (4" min. embed. in wall) on each side of the Raker.

US&R SHORING OPERATIONS GUIDE
CONSTRUCTING LATERAL SHORING SYSTEMS

RAKER BACKING – USED WHEN SUPPORTING WOOD WALLS

See page 3-8 for detail information including nailing.

- The plywood backing shown may be also used with Split Sole and Flying Rakers.
- Plywood is 24" high x 36" wide x 3/4" or 5/8" thick.
- Nail 16-16d from ply into back of wall plate, and 8-16d each side of raker into studs and/or edge of floor.
- The top of the plywood backing should be placed at the Insertion Point. Center Raker on a stud.

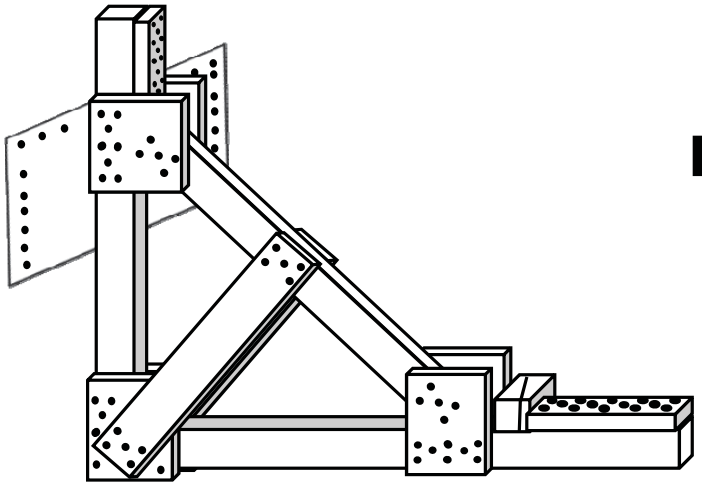

3

Raker Backing – Used when supporting badly cracked Concrete and Masonry Walls

- Plywood is 48" high (minimum) x 48" wide x 3/4" thick.
- Nail 16-16d from ply into back of wall plate.
- Connect Raker to wall using 2 or more 1/2" x 5 ½" wedge anchors, or 1/2" x 8" rebars (or smooth steel bars) through the backing material into the concrete wall (4" min. embed. in wall) on each side of the Raker.

3-15

SOLID SOLE RAKER (Lateral/Class 3)

Used in Incidents to stabilize leaning and/or damaged walls. Solid Sole, full triangle, rakers are most desirable, and are built at 45 or 60 deg angle, in groups of 2 or more as Class 3 system with lateral bracing.	
Material List: (per raker – need two or more)	
1 - Wall Plate	2- 1/2" drill-in wall plate anchors for 45 deg. & 3 anchors for 60 deg.
1 - Raker	6 – Full Gussets
2 - Mid-point braces	1 – 2 x 4 or 4 x 4 Wedge Set
1 – Sole Plate	2- 24" long cleats, 14-16d each for 45 degree rakers Top cleat is 30" long, 20-16d for 60 degree rakers (24" at bottom)
Sole Plate Anchors: 2 - Pickets or 4 (in soil)	
Foot at soil support: 3- 2 x 6 x 18" or 2 - 3/4" x 18" x 18" square plywood	

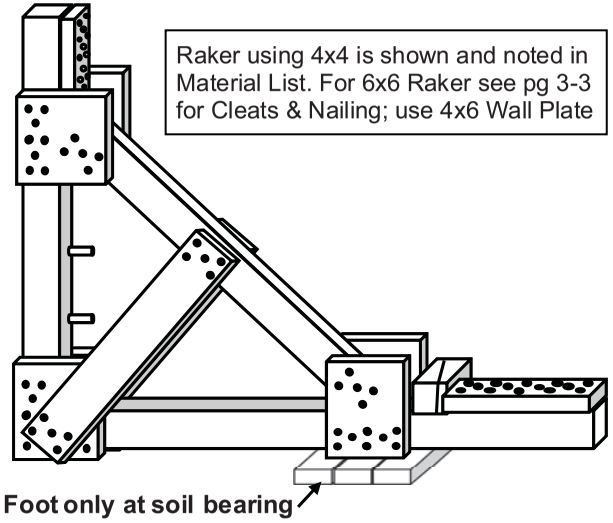

US&R SHORING OPERATIONS GUIDE
CONSTRUCTING LATERAL SHORING SYSTEMS

SOLID SOLE RAKER (Lateral/Class 3)

Used in Incidents to stabilize leaning and/or damaged walls. Solid Sole, full triangle, rakers are most desirable, and are built at 45 or 60 deg angle, in groups of 2 or more as Class 3 system with lateral bracing.	
Material List: (per raker – need two or more)	
1 - Wall Plate	2- 1/2" drill-in wall plate anchors for 45 deg. & 3 anchors for 60 deg.
1 - Raker	6 – Full Gussets
2 - Mid-point braces	1 – 2 x 4 or 4 x 4 Wedge Set
1 – Sole Plate	2- 24" long cleats, 14-16d each for 45 degree rakers Top cleat is 30" long, 20-16d for 60 degree rakers (24" at bottom)
Sole Plate Anchors: 2 - Pickets or 4 (in soil)	
Foot at soil support: 3- 2 x 6 x 18" or 2 - 3/4" x 18" x 18" square plywood	

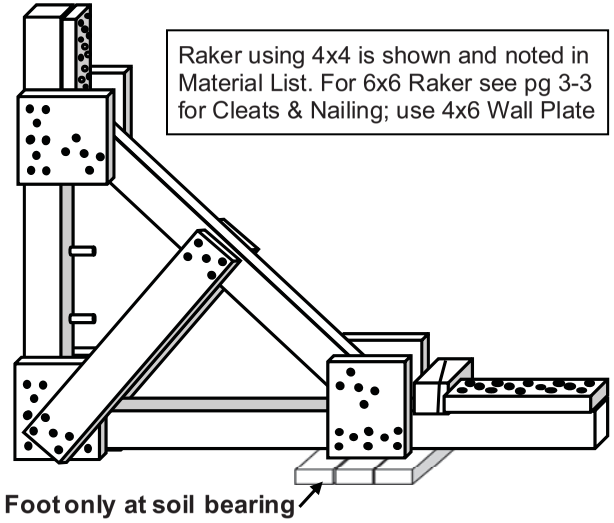

3-16

HOW TO CONSTRUCT A SOLID SOLE RAKER

1. Determine where to erect the raker shores, the height of supported wall, and the height of Insertion Point.
2. If area is not clear of debris, consider Split Sole Raker.
3. Select angle of Raker, then measure and cut the Wall Plate, Sole Plate and Raker to the proper length.

- Sole and Wall Plate extends at least 30" from where the raker intersects them to allow for the Cleats.
- Angle-cut ends of raker with 1½ " return cuts for full contact with the wall and sole plates, cleats and wedges.

4. Pre-fabricate Wall Plate, Raker, Sole, and Sole Anchor.

- Toe-nail Sole to base of Wall Plate, square inside to 90deg, and secure with gusset plate on one side.
- Layout Raker at selected angle, intersection with Wall Plate and Sole. Anchor to Wall Plate with 16d nail, install top cleat and nail-on gusset one side.
- Nail one Sole Gusset to Raker, but not to Sole at this time, since Raker may need later adjusting.
- Mark Sole for position of Bottom Cleat, allowing for Wedges.
- Flip Raker Shore over and nail gussets on opposite side, but remember to nail the Raker to Sole Gusset, to Raker only, not to Sole to allow for later adjustment.

5. Carefully move the partially prefabricated Rake Shore in place at the wall and make sure it is plumb (side to side).

- With Raker Shore placed against the wall, the Sole should be carefully driven-in so the Wall Plate is snug against the Wall, and then the Bottom Cleat should be completely nailed, allowing space for the Wedges.
- Full contact must be maintained between the wall plate and the insertion point as well as at base of wall. (If the wall bulges out, add shims to maintain full contact)

6. After anchoring Sole Plate (see 12.), install wedges between the bottom cleat and base of the Raker and tighten them slightly.

- After adjusting the shims/spacers (if any) between the wall plate and the wall being shored to ensure full contact, above, finish tightening wedges and complete nailing of gusset on each side.

US&R SHORING OPERATIONS GUIDE
CONSTRUCTING LATERAL SHORING SYSTEMS

HOW TO CONSTRUCT A SOLID SOLE RAKER

1. Determine where to erect the raker shores, the height of supported wall, and the height of Insertion Point.
2. If area is not clear of debris, consider Split Sole Raker.
3. Select angle of Raker, then measure and cut the Wall Plate, Sole Plate and Raker to the proper length.

- Sole and Wall Plate extends at least 30" from where the raker intersects them to allow for the Cleats.
- Angle-cut ends of raker with 1½ " return cuts for full contact with the wall and sole plates, cleats and wedges.

4. Pre-fabricate Wall Plate, Raker, Sole, and Sole Anchor.

- Toe-nail Sole to base of Wall Plate, square inside to 90deg, and secure with gusset plate on one side.
- Layout Raker at selected angle, intersection with Wall Plate and Sole. Anchor to Wall Plate with 16d nail, install top cleat and nail-on gusset one side.
- Nail one Sole Gusset to Raker, but not to Sole at this time, since Raker may need later adjusting.
- Mark Sole for position of Bottom Cleat, allowing for Wedges.
- Flip Raker Shore over and nail gussets on opposite side, but remember to nail the Raker to Sole Gusset, to Raker only, not to Sole to allow for later adjustment.

5. Carefully move the partially prefabricated Rake Shore in place at the wall and make sure it is plumb (side to side).

- With Raker Shore placed against the wall, the Sole should be carefully driven-in so the Wall Plate is snug against the Wall, and then the Bottom Cleat should be completely nailed, allowing space for the Wedges.
- Full contact must be maintained between the wall plate and the insertion point as well as at base of wall. (If the wall bulges out, add shims to maintain full contact)

6. After anchoring Sole Plate (see 12.), install wedges between the bottom cleat and base of the Raker and tighten them slightly.

- After adjusting the shims/spacers (if any) between the wall plate and the wall being shored to ensure full contact, above, finish tightening wedges and complete nailing of gusset on each side.

3-17

3

HOW TO CONSTRUCT A SOLID SOLE RAKER (contin.)

7. With Raker shore erected, prevent the Raker shore from sliding up the wall, using a minimum of 2- 1/2" drill-in anchors with 4" min. embed in wall or other methods. See ADDITIONAL INFO.
8. Attach Mid Point Braces (required if 4x4 Raker is longer than 11 feet and/or 6x6 Raker is longer than 17 feet).
9. Attach Horizontal Braces.

- Connect Raker shores together near the top and bottom of the Raker with at least 2x6 size material, or two 2x4s.
- For Insertion Point greater than 8 feet*, an additional Horizontal Brace shall be placed at mid-length of the Raker, right where the Mid-Point Braces intersect. *(4x4 longer than 11 ft and 6x6 longer than 17ft).
- Horizontal braces may be butt-spliced at center of any raker. Use 3-16d ea end plus half-gusset with 4-8d each side splice.

10. All raker shore systems must be connected with either X or V bracing placed between the horizontal braces, see page 3-6. Use 2x6 or 2-2x4 for each brace.
11. Attach the **first brace to the rakers** near the top and bottom between the upper and lower horizontal braces. (between the lower and mid-horizontal, and mid and upper horizontal when mid-braces are required.

- Attach the **second brace to the upper, mid, and lower horizontal braces** near the Rakers. (but not on top of the nailing of horizontals to rakers).

12. **Methods to Anchor the Sole Plate**, in order to prevent the assembled shore from sliding away from the wall.

- **Preferred Method**: Use **Sole Anchor** as shown on page 3-9 and as noted in ADDITIONAL INFORMATION on next page. This is preferred, since installation can be installed with less risk, at greater distance from wall.
- **Alternative Method:** One may attach the sole plate directly to concrete, asphalt or soil by drilling a minimum of two 1" holes through the sole plate, concrete, or asphalt and drive 1" x 36" steel pickets or rebar directly into the ground below. Need at least 4 – 1"x 36" pickets per raker when no concrete or asphalt paving is present, and anchoring into ground only.

US&R SHORING OPERATIONS GUIDE
CONSTRUCTING LATERAL SHORING SYSTEMS

HOW TO CONSTRUCT A SOLID SOLE RAKER (contin.)

7. With Raker shore erected, prevent the Raker shore from sliding up the wall, using a minimum of 2- 1/2" drill-in anchors with 4" min. embed in wall or other methods. See ADDITIONAL INFO.
8. Attach Mid Point Braces (required if 4x4 Raker is longer than 11 feet and/or 6x6 Raker is longer than 17 feet).
9. Attach Horizontal Braces.

- Connect Raker shores together near the top and bottom of the Raker with at least 2x6 size material, or two 2x4s.
- For Insertion Point greater than 8 feet*, an additional Horizontal Brace shall be placed at mid-length of the Raker, right where the Mid-Point Braces intersect. *(4x4 longer than 11 ft and 6x6 longer than 17ft).
- Horizontal braces may be butt-spliced at center of any raker. Use 3-16d ea end plus half-gusset with 4-8d each side splice.

10. All raker shore systems must be connected with either X or V bracing placed between the horizontal braces, see page 3-6. Use 2x6 or 2-2x4 for each brace.
11. Attach the **first brace to the rakers** near the top and bottom between the upper and lower horizontal braces. (between the lower and mid-horizontal, and mid and upper horizontal when mid-braces are required.

- Attach the **second brace to the upper, mid, and lower horizontal braces** near the Rakers. (but not on top of the nailing of horizontals to rakers).

12. **Methods to Anchor the Sole Plate**, in order to prevent the assembled shore from sliding away from the wall.

- **Preferred Method**: Use **Sole Anchor** as shown on page 3-9 and as noted in ADDITIONAL INFORMATION on next page. This is preferred, since installation can be installed with less risk, at greater distance from wall.
- **Alternative Method:** One may attach the sole plate directly to concrete, asphalt or soil by drilling a minimum of two 1" holes through the sole plate, concrete, or asphalt and drive 1" x 36" steel pickets or rebar directly into the ground below. Need at least 4 – 1"x 36" pickets per raker when no concrete or asphalt paving is present, and anchoring into ground only.

3-18

ADDITIONAL INFORMATION – Solid Sole Raker

1. Design Load for one Raker.

   4x4 Raker = 2,500lb **6x6 Raker = 3,600lb**

2. Raker information:

- 4 x 4 maximum length without mid-brace: 11 feet.
- 6 x 6 maximum length without mid-brace: 17 feet.

3. To attach wall plate directly to a concrete/masonry wall use 1/2" drill-in anchors as noted below:

- Place a minimum of two 1/2" x 8 ½" wedge anchors, or 1/2" x 8" long rebar or smooth bar (4" min embed in wall) through wall plate for 45 deg rakers. Use 3 anchors for 60 deg rakers.
- At concrete walls, if 3/4" plywood backing is needed, attached it to wall plate with 16-16d nails, and use at least two 1/2"x 5 ½" wedge anchors, or 1/2" x 8" rebar/smooth bar through backing into concrete wall (4" min embed) each side of Raker.

4. To attach the wall plate directly to a wood framed wall.

- Use 2 ft high x 3ft wide (min) x 3/4" or 5/8" ply backing nailed with 16-16d to the wall plate. Center raker on a stud, and use at least 8-16d nails through the backing material into studs and/or edge of floor, each side of Raker.

5. Place an 18" x 18" Foot under the sole at intersection of raker, when bearing on soil.

- Use 3 – 2 x 6 x 18" or 2 – layers of 3/4" x 18" x 18" plywood.

6. A Sole Anchor can be secured to the ground or floor behind the sole plate to prevent sole plate from backing away from the wall.

- Timber Anchors should be as least 4x4 size lumber, (6x6 is better). Place 4 – 1" diameter x 36" pickets per raker, spaced about 12" o.c. into Soil, and as noted on page 3-9. Two pickets may be used into concrete or paving.
- Specially made steel anchor brackets may be used with a minimum of 2- 1/2" x 5 ½" wedge anchors into concrete.
- Concrete curbs, walls and other nearby secure structures may also be used.

US&R SHORING OPERATIONS GUIDE
CONSTRUCTING LATERAL SHORING SYSTEMS

ADDITIONAL INFORMATION – Solid Sole Raker

1. Design Load for one Raker.

   4x4 Raker = 2,500lb **6x6 Raker = 3,600lb**

2. Raker information:

- 4 x 4 maximum length without mid-brace: 11 feet.
- 6 x 6 maximum length without mid-brace: 17 feet.

3. To attach wall plate directly to a concrete/masonry wall use 1/2" drill-in anchors as noted below:

- Place a minimum of two 1/2" x 8 ½" wedge anchors, or 1/2" x 8" long rebar or smooth bar (4" min embed in wall) through wall plate for 45 deg rakers. Use 3 anchors for 60 deg rakers.
- At concrete walls, if 3/4" plywood backing is needed, attached it to wall plate with 16-16d nails, and use at least two 1/2"x 5 ½" wedge anchors, or 1/2" x 8" rebar/smooth bar through backing into concrete wall (4" min embed) each side of Raker.

3

4. To attach the wall plate directly to a wood framed wall.

- Use 2 ft high x 3ft wide (min) x 3/4" or 5/8" ply backing nailed with 16-16d to the wall plate. Center raker on a stud, and use at least 8-16d nails through the backing material into studs and/or edge of floor, each side of Raker.

5. Place an 18" x 18" Foot under the sole at intersection of raker, when bearing on soil.

- Use 3 – 2 x 6 x 18" or 2 – layers of 3/4" x 18" x 18" plywood.

6. A Sole Anchor can be secured to the ground or floor behind the sole plate to prevent sole plate from backing away from the wall.

- Timber Anchors should be as least 4x4 size lumber, (6x6 is better). Place 4 – 1" diameter x 36" pickets per raker, spaced about 12" o.c. into Soil, and as noted on page 3-9. Two pickets may be used into concrete or paving.
- Specially made steel anchor brackets may be used with a minimum of 2- 1/2" x 5 ½" wedge anchors into concrete.
- Concrete curbs, walls and other nearby secure structures may also be used.

3-19

SPLIT SOLE RAKER (Lateral/Class 3)

Split Sole Rakers, should replace Solid Sole Rakers when debris are next to the damaged wall. Braced Sys.	
Material List: (per raker- need 2 or more for system	
1 - Wall Plate	24" long top cleats, 14-16d each for 45 degree rakers (30" long, 20-16d for 60 deg)
1 - Raker	2 – Full Gussets
2 – Bottom Braces	1 – 2 x 4 or 4 x 4 Wedge Set
2 -Mid-point braces (When required)	2- 1/2" drill-in wall plate anchors for 45 deg. & 3 anchors for 60 deg
1 – Trough (see pg 3-9) add 18" x18" base/foot on soil.	
Trough Anchors: 2 - Pickets in paving (or 4 in soil)	

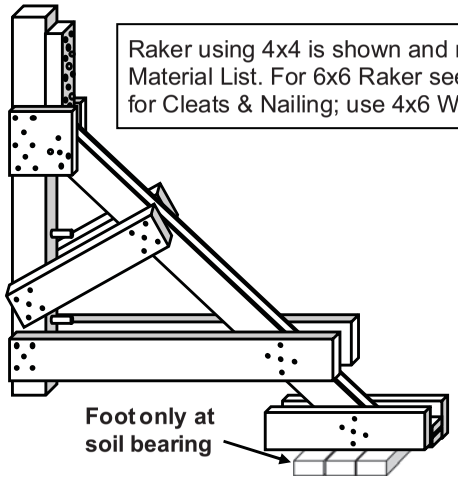

HOW TO CONSTRUCT a SPLIT SOLE RAKER

1. Determine where to erect the Raker Shores and the height of supported wall, and height of Insertion Point.

- Temporary shoring may be needed, but most of debris may not need to be removed for Split Sole Raker.

US&R SHORING OPERATIONS GUIDE
CONSTRUCTING LATERAL SHORING SYSTEMS

SPLIT SOLE RAKER (Lateral/Class 3)

Split Sole Rakers, should replace Solid Sole Rakers when debris are next to the damaged wall. Braced Sys.	
Material List: (per raker- need 2 or more for system	
1 - Wall Plate	24" long top cleats, 14-16d each for 45 degree rakers (30" long, 20-16d for 60 deg)
1 - Raker	2 – Full Gussets
2 – Bottom Braces	1 – 2 x 4 or 4 x 4 Wedge Set
2 -Mid-point braces (When required)	2- 1/2" drill-in wall plate anchors for 45 deg. & 3 anchors for 60 deg
1 – Trough (see pg 3-9) add 18" x18" base/foot on soil.	
Trough Anchors: 2 - Pickets in paving (or 4 in soil)	

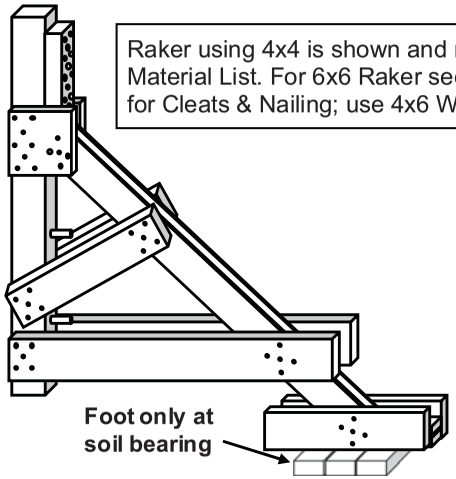

HOW TO CONSTRUCT a SPLIT SOLE RAKER

1. Determine where to erect the Raker Shores and the height of supported wall, and height of Insertion Point.

- Temporary shoring may be needed, but most of debris may not need to be removed for Split Sole Raker.

3-20

2. Select angle of Raker, then measure and cut the Wall Plate, Raker, and Bottom Brace to the proper length.

- If there is rubble next to wall, wall plate will not extend to ground, and Bottom Brace will be attached at bottom of Wall Plate, and slope to within 6” of Trough Base.
- Raker angle may be 45 or 60 deg into Trough Base.
- Angle-cut both ends of Raker with 1½ " return cuts for full contact with wall plate, top cleat, and Trough Cleat.

3. Pre-fabricate and cut, Raker, Wall Plate, Bottom Brace, and Sole Anchor to proper length, and perform raker angle cuts.

- Layout Wall Plate, Raker and Bottom Brace at selected angle, and toe-nail Raker to Wall Plate.
- Nail-on Top Cleat, then gusset to one side of this joint.
- Nail one-Bottom Brace to Wall Plate, 6” from bottom, or in position to clear debris, but only tack-nail it to Raker.
- Turn shore over and nail-on other gusset plus other Bottom Brace to Wall Plate.
- Tack-nail Bottom Braces to Raker, so it can be moved to wall.
- Assemble the Trough, as well as the 18” x 18” foot (if bearing on soil), and place in approximate position.

4. Move the partially prefabricated Split Sole Raker Shore in place at the wall and make sure it is plumb (side to side).

- After securing the Sole Anchor, adjust the Trough, and drive wedges slightly against it.
- Maintain full contact between the wall plate at the insertion point and at base of wall plate and the wall.
- For bulging walls, add tight shims/spacers, then finish tightening wedges & finish nailing of Bottom Braces.
- Anchor shore to concrete or masonry walls, by placing 2- 1/2" drill-in anchors for 45 deg. & 3- 1/2" anchors for 60 deg through the wall plate into wall, per ADDITIONAL INFO. 3. For wood walls, center raker on stud and see ADDITIONAL INFO. 4.
- Place the Mid-Brace, if required by length of Raker, and erect the Horizontal and X-bracing, per Solid Sole.
- Secure the Sole Anchor as shown on page 3-9, and as noted in ADDITIONAL INFORMATION 6 on next page.

US&R SHORING OPERATIONS GUIDE
CONSTRUCTING LATERAL SHORING SYSTEMS

2. Select angle of Raker, then measure and cut the Wall Plate, Raker, and Bottom Brace to the proper length.

- If there is rubble next to wall, wall plate will not extend to ground, and Bottom Brace will be attached at bottom of Wall Plate, and slope to within 6” of Trough Base.
- Raker angle may be 45 or 60 deg into Trough Base.
- Angle-cut both ends of Raker with 1½ " return cuts for full contact with wall plate, top cleat, and Trough Cleat.

3. Pre-fabricate and cut, Raker, Wall Plate, Bottom Brace, and Sole Anchor to proper length, and perform raker angle cuts.

- Layout Wall Plate, Raker and Bottom Brace at selected angle, and toe-nail Raker to Wall Plate.
- Nail-on Top Cleat, then gusset to one side of this joint.
- Nail one-Bottom Brace to Wall Plate, 6” from bottom, or in position to clear debris, but only tack-nail it to Raker.
- Turn shore over and nail-on other gusset plus other Bottom Brace to Wall Plate.
- Tack-nail Bottom Braces to Raker, so it can be moved to wall.
- Assemble the Trough, as well as the 18” x 18” foot (if bearing on soil), and place in approximate position.

4. Move the partially prefabricated Split Sole Raker Shore in place at the wall and make sure it is plumb (side to side).

- After securing the Sole Anchor, adjust the Trough, and drive wedges slightly against it.
- Maintain full contact between the wall plate at the insertion point and at base of wall plate and the wall.
- For bulging walls, add tight shims/spacers, then finish tightening wedges & finish nailing of Bottom Braces.
- Anchor shore to concrete or masonry walls, by placing 2- 1/2" drill-in anchors for 45 deg. & 3- 1/2" anchors for 60 deg through the wall plate into wall, per ADDITIONAL INFO. 3. For wood walls, center raker on stud and see ADDITIONAL INFO. 4.
- Place the Mid-Brace, if required by length of Raker, and erect the Horizontal and X-bracing, per Solid Sole.
- Secure the Sole Anchor as shown on page 3-9, and as noted in ADDITIONAL INFORMATION 6 on next page.

3

3-21

ADDITIONAL INFORMATION – Split Sole Raker

1. **Design Load for one Raker:**
   4x4 Raker = 2,500lb 6x6 Raker = 3,600lb
2. Raker: 4 x 4 max length w/o mid-brace: 11 feet
   6 x 6 max length w/o mid-brace: 17 feet
3. To attach wall plate directly to a concrete/masonry wall use 1/2" drill-in anchors as noted below:

- Place a minimum of two 1/2" x 8 ½" wedge anchors, or 1/2" x 8" long rebar or smooth bar (4" min embed in wall) through wall plate for 45 deg rakers. Use 3 anchors for 60 deg rakers.
- At concrete walls, if 3/4" plywood backing is needed, attached it to wall plate with 16-16d nails, and use at least two 1/2" x 5 ½" wedge anchor, or 1/2" x 8" rebar/smooth bar through backing into concrete wall (4" min embed) each side of raker.

4. To attach the wall plate directly to a wood framed wall.

- Use 2 ft high x 4ft wide x 3/4"or 5/8" ply backing nailed with 16-16d to the wall plate. Center raker on a stud, and use at least 8-16d nails through the backing material into studs and/or edge of floor, each side of Raker.

5. Use the Trough Base with a Sole Anchor.

- Place a 18" x 18" Foot under Trough Base, when bearing on soil. Use 3 – 2 x 6 x 18" or 2 - layers of 3/4" x 18" x 18" plywood.

6. A Sole Anchor should be secured to the ground or floor behind the sole plate to prevent the sole plate from backing away from the wall.

- Timber Anchors should be as least 4x4 size lumber, (6x6 is better). Place 4 – 1" diameter x 36" pickets per raker, spaced about 12" o.c. into Soil, and as noted on page 3-9. Two pickets may be used into concrete or paving.
- Specially made steel anchor brackets may be used with a minimum of two - 1/2" drill-in anchors to concrete.
- Concrete curbs, walls and other nearby secure structures may also be used.

US&R SHORING OPERATIONS GUIDE
CONSTRUCTING LATERAL SHORING SYSTEMS

ADDITIONAL INFORMATION – Split Sole Raker

1. **Design Load for one Raker:**
   4x4 Raker = 2,500lb 6x6 Raker = 3,600lb
2. Raker: 4 x 4 max length w/o mid-brace: 11 feet
   6 x 6 max length w/o mid-brace: 17 feet
3. To attach wall plate directly to a concrete/masonry wall use 1/2" drill-in anchors as noted below:

- Place a minimum of two 1/2" x 8 ½" wedge anchors, or 1/2" x 8" long rebar or smooth bar (4" min embed in wall) through wall plate for 45 deg rakers. Use 3 anchors for 60 deg rakers.
- At concrete walls, if 3/4" plywood backing is needed, attached it to wall plate with 16-16d nails, and use at least two 1/2" x 5 ½" wedge anchor, or 1/2" x 8" rebar/smooth bar through backing into concrete wall (4" min embed) each side of raker.

4. To attach the wall plate directly to a wood framed wall.

- Use 2 ft high x 4ft wide x 3/4"or 5/8" ply backing nailed with 16-16d to the wall plate. Center raker on a stud, and use at least 8-16d nails through the backing material into studs and/or edge of floor, each side of Raker.

5. Use the Trough Base with a Sole Anchor.

- Place a 18" x 18" Foot under Trough Base, when bearing on soil. Use 3 – 2 x 6 x 18" or 2 - layers of 3/4" x 18" x 18" plywood.

6. A Sole Anchor should be secured to the ground or floor behind the sole plate to prevent the sole plate from backing away from the wall.

- Timber Anchors should be as least 4x4 size lumber, (6x6 is better). Place 4 – 1" diameter x 36" pickets per raker, spaced about 12" o.c. into Soil, and as noted on page 3-9. Two pickets may be used into concrete or paving.
- Specially made steel anchor brackets may be used with a minimum of two - 1/2" drill-in anchors to concrete.
- Concrete curbs, walls and other nearby secure structures may also be used.

3-22

DOUBLE RAKER (May make from 4x4 or 6x6)

Is a Modified Solid Sole, full triangle, raker may be used to stabilize 2-story buildings & high walls. It has the same requirements and is built similar to Solid Sole, see pg 3-16	
Material List: (per raker – need two or more)	
1 - Wall Plate (4x4, 4x6)	3 - 1/2" drill-in wall plate anchors for 45 deg. & 5 anchors for 60 deg.
2 Rakers (4x4, 6x6)	8 - Full Gussets
2 - Midpoint braces*	2 – 2 x 4 or 4 x 4 Wedge Sets
* = 4 Mid-braces if Insertion Pt is 16ft+ 1 – Sole Plate	4- 24" long cleats, 14-16d each for 45 degree rakers Top cleats are 30" long, 20-16d for 60 degree rakers (24" at bottom)
Sole Plate Anchors: 3 – Pickets into paving or 6 into soil	
2 feet at soil support: (under sole ea Raker)	3- 2 x 6 x 18" each or 2 - 3/4" x 18" x 18" square ply

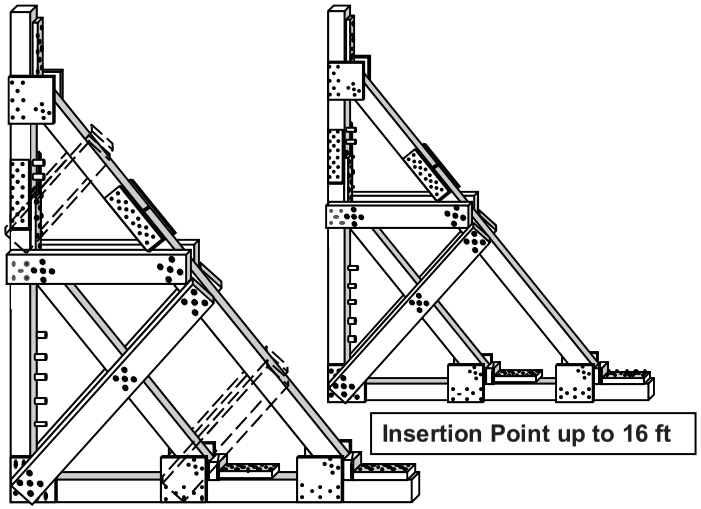

Insertion Point - 16 ft to 24 ft for 4x4 Rakers (see pg 3-24)

US&R SHORING OPERATIONS GUIDE
CONSTRUCTING LATERAL SHORING SYSTEMS

DOUBLE RAKER (May make from 4x4 or 6x6)

Is a Modified Solid Sole, full triangle, raker may be used to stabilize 2-story buildings & high walls. It has the same requirements and is built similar to Solid Sole, see pg 3-16	
Material List: (per raker – need two or more)	
1 - Wall Plate (4x4, 4x6)	3 - 1/2" drill-in wall plate anchors for 45 deg. & 5 anchors for 60 deg.
2 Rakers (4x4, 6x6)	8 - Full Gussets
2 - Midpoint braces*	2 – 2 x 4 or 4 x 4 Wedge Sets
* = 4 Mid-braces if Insertion Pt is 16ft+ 1 – Sole Plate	4- 24" long cleats, 14-16d each for 45 degree rakers Top cleats are 30" long, 20-16d for 60 degree rakers (24" at bottom)
Sole Plate Anchors: 3 – Pickets into paving or 6 into soil	
2 feet at soil support: (under sole ea Raker)	3- 2 x 6 x 18" each or 2 - 3/4" x 18" x 18" square ply

3

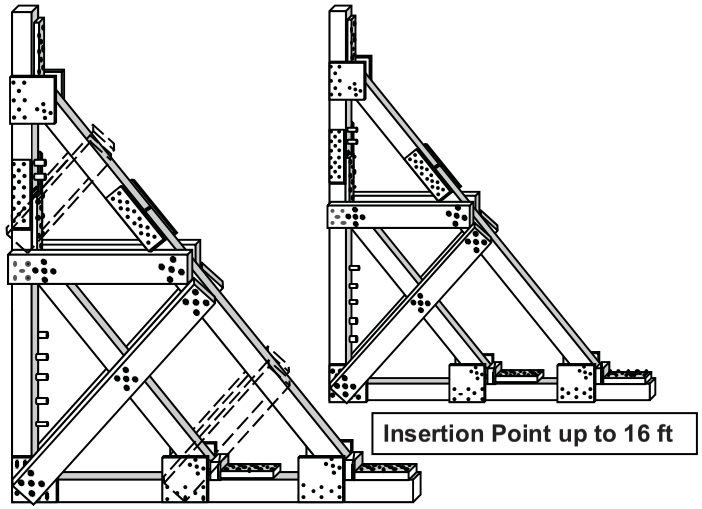

Insertion Point - 16 ft to 24 ft for 4x4 Rakers (see pg 3-24)

3-23

DOUBLE RAKER (continued)

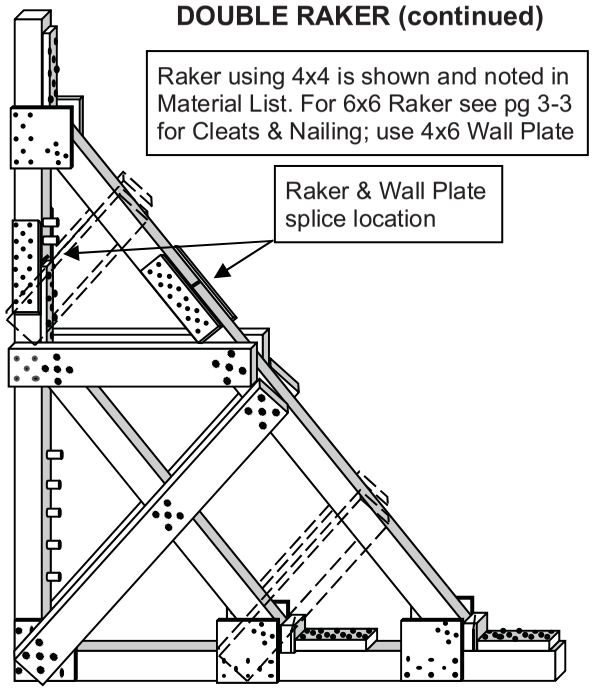

Double Raker Notes

1. For 4x4 Dbl Rakers with Insertion Pt. over 16ft must add 2 sets of Mid-braces as shown, for a total of 4 pair of Mid-braces.
2. For 6x6 Dbl Rakers the added mid braces are only needed if Insertion Pt. is more than 24 feet.
3. Use standard Raker Splices (page 3-8) for Raker & Wall Pl splices, and place them in location shown for best bracing.
4. Must add 2–1/2" Wall Pl Anch. above Wall Pl Splice as shown.
5. Provide lateral bracing between rakers (page 3-6). Place one Horizontal 2x6 at intersection of each Mid-brace with Raker. (Need 4 sets of cross bracing at 4x4 Dbl Raker for Insertion Pt over 16ft., and at 6x6 Dbl Raker for Insertion Pt over 24ft.)

US&R SHORING OPERATIONS GUIDE
CONSTRUCTING LATERAL SHORING SYSTEMS

DOUBLE RAKER (continued)

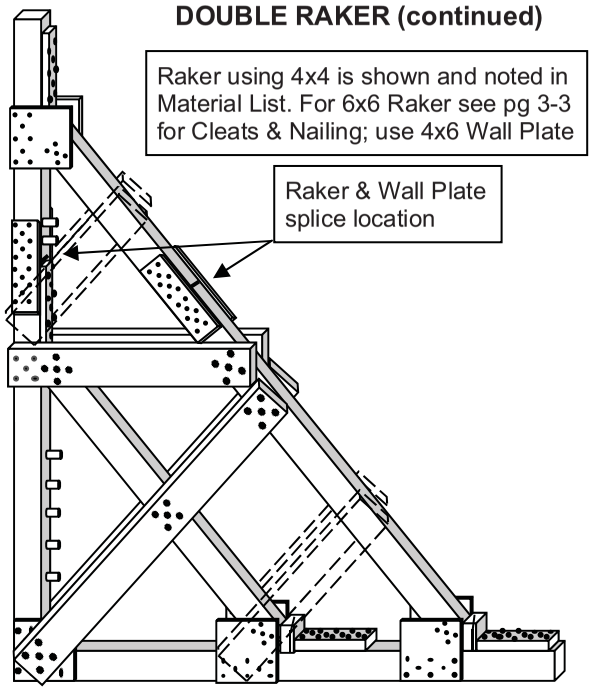

Double Raker Notes

1. For 4x4 Dbl Rakers with Insertion Pt. over 16ft must add 2 sets of Mid-braces as shown, for a total of 4 pair of Mid-braces.
2. For 6x6 Dbl Rakers the added mid braces are only needed if Insertion Pt. is more than 24 feet.
3. Use standard Raker Splices (page 3-8) for Raker & Wall Pl splices, and place them in location shown for best bracing.
4. Must add 2–1/2" Wall Pl Anch. above Wall Pl Splice as shown.
5. Provide lateral bracing between rakers (page 3-6). Place one Horizontal 2x6 at intersection of each Mid-brace with Raker. (Need 4 sets of cross bracing at 4x4 Dbl Raker for Insertion Pt over 16ft., and at 6x6 Dbl Raker for Insertion Pt over 24ft.)

3-24

ALTERNATE-USING 3-2x4 STUDS for RAKERS
(Only if 4x4 lumber is NOT available)

- The following applies to Solid, Split-Sole, & Flying Rakers.
- If Doug Fir & Southern Pine are not available, rakers may be constructed using Hem-Fir and/or Spruce-Pine-Fir by reducing strength by 15%. If use Eastern Softwoods, Western Cedar, & Western Woods, reduce strength by 25%
- Raker may be made from two-3-2x4 pieces that are required length to have splice located above mid-brace intersection. Use Std plywood splice, per pg 3-9
- Wall Pl & Sole Pl are made from 3-2x4 staggered 2ft minimum thus:

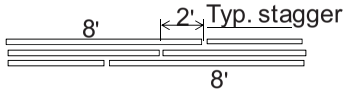

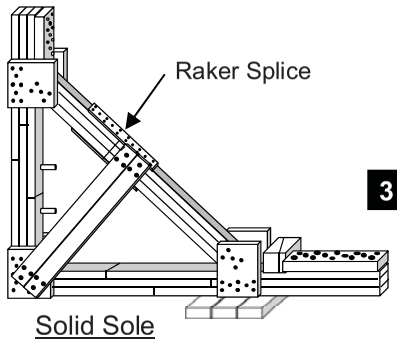

- Nail 16d cooler/sinkers at 5" o.c. stagger thus: (.148 x 3.25")

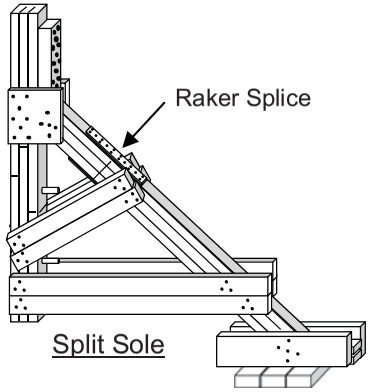

3

US&R SHORING OPERATIONS GUIDE
CONSTRUCTING LATERAL SHORING SYSTEMS

ALTERNATE-USING 3-2x4 STUDS for RAKERS
(Only if 4x4 lumber is NOT available)

- The following applies to Solid, Split-Sole, & Flying Rakers.
- If Doug Fir & Southern Pine are not available, rakers may be constructed using Hem-Fir and/or Spruce-Pine-Fir by reducing strength by 15%. If use Eastern Softwoods, Western Cedar, & Western Woods, reduce strength by 25%
- Raker may be made from two-3-2x4 pieces that are required length to have splice located above mid-brace intersection. Use Std plywood splice, per pg 3-9
- Wall Pl & Sole Pl are made from 3-2x4 staggered 2ft minimum thus:

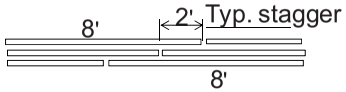

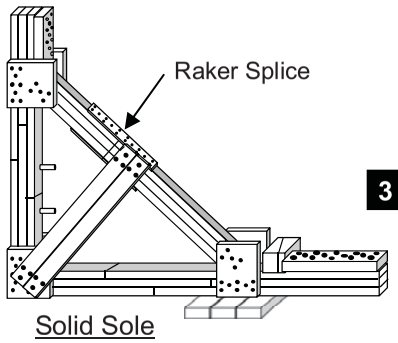

- Nail 16d cooler/sinkers at 5" o.c. stagger thus: (.148 x 3.25")

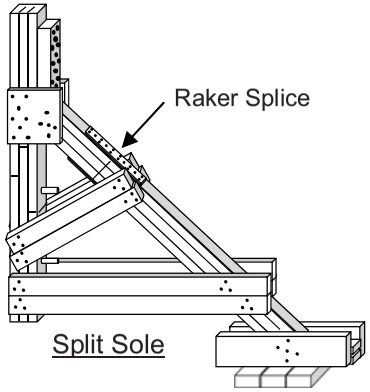

3-25

3

HORIZONTAL SHORE – 3-Strut, Non-Access

This shore can be used to stabilize parallel, vertical walls, especially walls that are bulging.	
Material List:	
2 – Wall Plates	1 – 2x Wedge Set per Strut
3-Struts (2 if used for access)	Single 4x Wedge per Strut 2 x 4 x 14" cleat each Strut
2 x Diagonal Bracing (non-access use)	1 – Half Gusset (1 each Strut if no diagonals)
1 - 2 x 4 x 14" Flat Cleat at each wedge set	

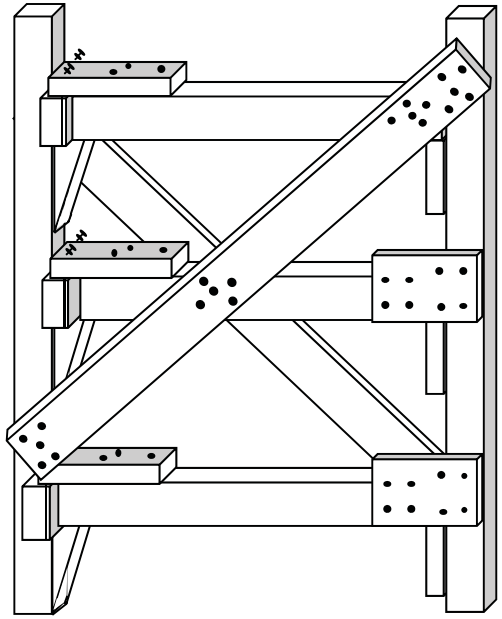

US&R SHORING OPERATIONS GUIDE
CONSTRUCTING LATERAL SHORING SYSTEMS

HORIZONTAL SHORE – 3-Strut, Non-Access

This shore can be used to stabilize parallel, vertical walls, especially walls that are bulging.
Material List:
2 – Wall Plates | 1 – 2x Wedge Set per Strut
3-Struts (2 if used for access) | Single 4x Wedge per Strut; 2 x 4 x 14" cleat each Strut
2 x Diagonal Bracing (non-access use) | 1 – Half Gusset (1 each Strut if no diagonals)
1 - 2 x 4 x 14" Flat Cleat at each wedge set

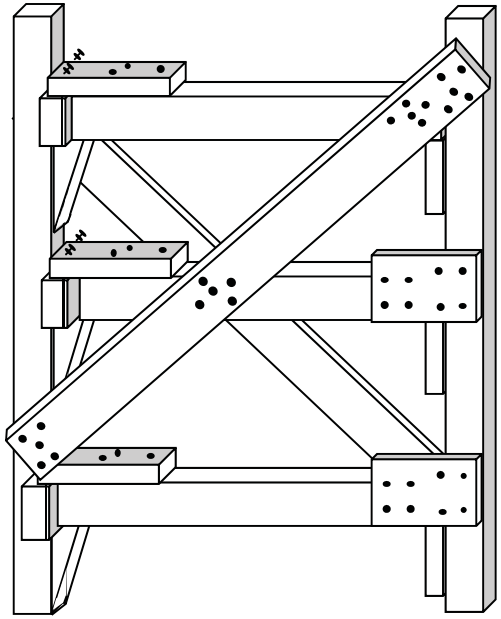

3-26

HOW TO CONSTRUCT HORIZONTAL SHORE

1. Determine where to erect the horizontal shore.
- After initial temporary shoring has been installed as needed, clear the area of debris.
- A clearance of three to four feet wide is usually adequate.
2. Measure and cut the wall plates & struts to the proper length.
- Measure between the wall plates where the struts are to be installed, deducting the width of the wedges.
3. Place both wall plates next to each other and attach 2 x 4 x 18" cleats and single 4x wedges to the wall plates w/ 5-16d each, just below where the struts will be installed.
- If 4x wedge is not available, use 2x wedge on top of a 2x cleat, And nail with 5-16d.
4. Place the wall plates in the area that is to be shored, square and in line with each other and as plumb as possible by shimming any void spaces behind the wall plates.
5. Install the struts between the wall plates. Keep the struts in line and plumb with the wall plates.
6. Install a set of wedges horizontally between the Wall Plate and each Strut, then tap them together simultaneously until the struts are tight.
- Toenail the wedges from top into wall plate. May need to use duplex nails for future adjustment.
- Add 2 x 4 x 14" cleats on top of struts at wedge end, and secure with 3-16d to strut plus 2-16d toenalis to Wall Plate.
7. At non-wedge end of strut, place half gusset one side.
8. If possible, attach the wall plates to the walls. (as for rakers)
9. Attach the diagonal braces to each side of the horizontal shore when not used for access or egress.
- The diagonal braces should be long enough to span entire length and be attached to both wall plates and each strut.
- When used, diagonal braces should be installed in a "X" pattern on opposite sides of struts. 5-16d each end.

US&R SHORING OPERATIONS GUIDE
CONSTRUCTING LATERAL SHORING SYSTEMS

HOW TO CONSTRUCT HORIZONTAL SHORE

1. Determine where to erect the horizontal shore.
- After initial temporary shoring has been installed as needed, clear the area of debris.
- A clearance of three to four feet wide is usually adequate.
2. Measure and cut the wall plates & struts to the proper length.
- Measure between the wall plates where the struts are to be installed, deducting the width of the wedges.
3. Place both wall plates next to each other and attach 2 x 4 x 18" cleats and single 4x wedges to the wall plates w/ 5-16d each, just below where the struts will be installed.
- If 4x wedge is not available, use 2x wedge on top of a 2x cleat, And nail with 5-16d.
4. Place the wall plates in the area that is to be shored, square and in line with each other and as plumb as possible by shimming any void spaces behind the wall plates.
5. Install the struts between the wall plates. Keep the struts in line and plumb with the wall plates.
6. Install a set of wedges horizontally between the Wall Plate and each Strut, then tap them together simultaneously until the struts are tight.
- Toenail the wedges from top into wall plate. May need to use duplex nails for future adjustment.
- Add 2 x 4 x 14" cleats on top of struts at wedge end, and secure with 3-16d to strut plus 2-16d toenalis to Wall Plate.
7. At non-wedge end of strut, place half gusset one side.
8. If possible, attach the wall plates to the walls. (as for rakers)
9. Attach the diagonal braces to each side of the horizontal shore when not used for access or egress.
- The diagonal braces should be long enough to span entire length and be attached to both wall plates and each strut.
- When used, diagonal braces should be installed in a "X" pattern on opposite sides of struts. 5-16d each end.

3

3-27

ADDITIONAL INFORMATION – Horizontal Shore

1. Maximum shore width for 4 x 4 struts: 10 feet.
2. Maximum shore width for 6 x 6 struts: 16 feet.
3. Wall Plates: 4 x 4, 4 x 6, or 6 x 6.

- Spacing for 4 x 4 struts: Maximum 4 feet on center.
- Spacing for 6 x 6 struts: Maximum 5 feet on center.

4. Miscellaneous:

- X – bracing is 2 x 6 with 5-16d each end.
- Place one half of 4 x wedge set under end of strut where wedges are installed, 5-16d nails.
- Alternate 1: Place 2 x 4 x 18" Angle Cleat to confine wedges, 3-16d each end.
- Alternate 2: Place 2 x 4 x 14" Cleat on top of strut with 3-16d to Strut and 2-16d toenails to Wall Plate
- Place 2x4, 14" long cleat under opposite end of strut from wedges. 5-16d nails. Add half gusset on side.

HORIZONTAL SHORE – 2-Strut, Access Type

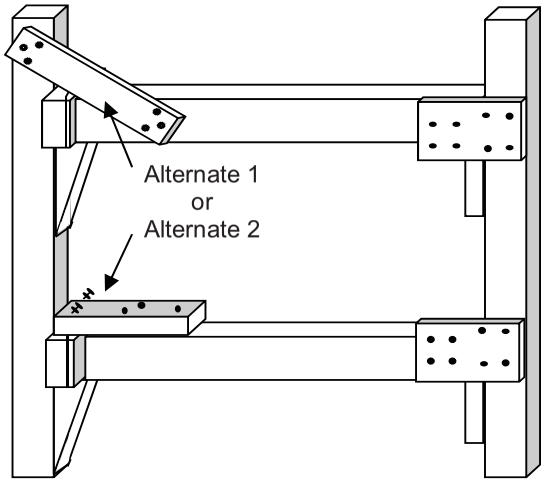

US&R SHORING OPERATIONS GUIDE
CONSTRUCTING LATERAL SHORING SYSTEMS

ADDITIONAL INFORMATION – Horizontal Shore

1. Maximum shore width for 4 x 4 struts: 10 feet.
2. Maximum shore width for 6 x 6 struts: 16 feet.
3. Wall Plates: 4 x 4, 4 x 6, or 6 x 6.

- Spacing for 4 x 4 struts: Maximum 4 feet on center.
- Spacing for 6 x 6 struts: Maximum 5 feet on center.

4. Miscellaneous:

- X – bracing is 2 x 6 with 5-16d each end.
- Place one half of 4 x wedge set under end of strut where wedges are installed, 5-16d nails.
- Alternate 1: Place 2 x 4 x 18" Angle Cleat to confine wedges, 3-16d each end.
- Alternate 2: Place 2 x 4 x 14" Cleat on top of strut with 3-16d to Strut and 2-16d toenails to Wall Plate
- Place 2x4, 14" long cleat under opposite end of strut from wedges. 5-16d nails. Add half gusset on side.

HORIZONTAL SHORE – 2-Strut, Access Type

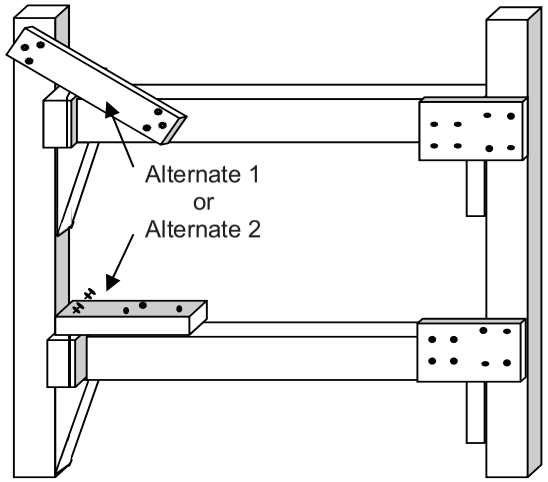

3-28

WALL TIEBACKS

Tiebacks may be used to stabilize hazardous walls that are above the height that can be braced by Raker Shores. Tiebacks are constructed using the following:

- **Strong-backs** that extent from at least one floor to the one above or below. This allows the force placed in the strong-back by the tiebacks to be resisted by the floors of the structure.
- **Strong-backs** may be made from 4x4, 4x6, or double 2x8 or 2x10, depending on floor height. (depending on need)
- **Tiebacks** may be made from very strong rope or wire rope cable. (1/4" to 1/2" diameter wire rope cable)
- **Cable tiebacks** can be anchored to the tiebacks using a double basket or choker hitch. (Dbl basket is twice as strong as choker)
- **Loops** may be made in cable using Wire Rope Clips to facilitate the connections.
- **Cables** may be anchored to concrete structure using swivel hoist rings and drilled-in anchors .

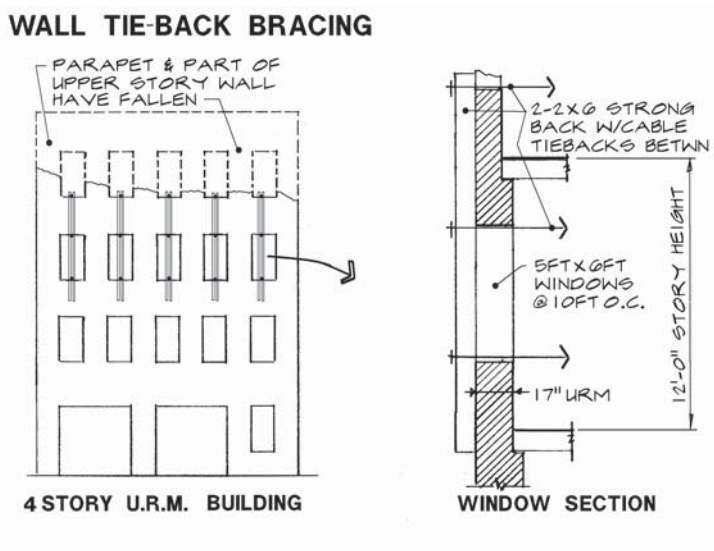

US&R SHORING OPERATIONS GUIDE
CONSTRUCTING LATERAL SHORING SYSTEMS

WALL TIEBACKS

Tiebacks may be used to stabilize hazardous walls that are above the height that can be braced by Raker Shores. Tiebacks are constructed using the following:

- **Strong-backs** that extent from at least one floor to the one above or below. This allows the force placed in the strong-back by the tiebacks to be resisted by the floors of the structure.
- **Strong-backs** may be made from 4x4, 4x6, or double 2x8 or 2x10, depending on floor height. (depending on need)
- **Tiebacks** may be made from very strong rope or wire rope cable. (1/4" to 1/2" diameter wire rope cable)
- **Cable tiebacks** can be anchored to the tiebacks using a double basket or choker hitch. (Dbl basket is twice as strong as choker)
- **Loops** may be made in cable using Wire Rope Clips to facilitate the connections.
- **Cables** may be anchored to concrete structure using swivel hoist rings and drilled-in anchors .

3

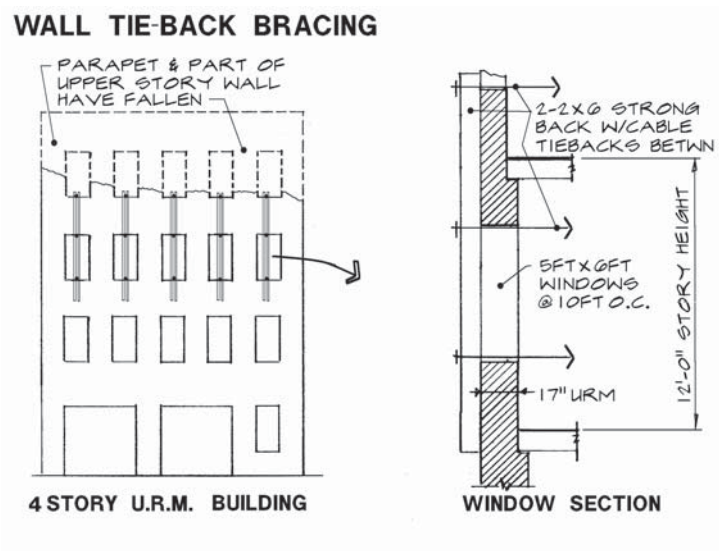

3-29

RAKER SHORE ALTERNATIVES

LATERAL WALL BRACING

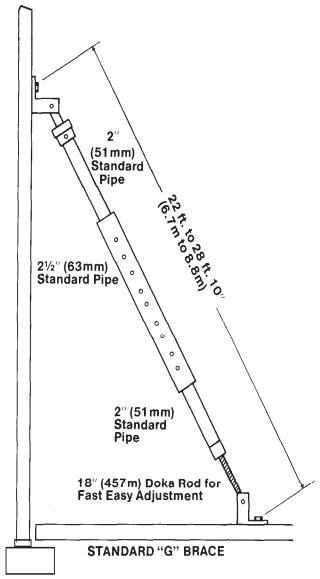

STANDARD "G" TILT-UP BRACE

Standard "G" Brace is designed for use with large tilt-up panels. Major adjustments within 12 inches (305mm) of the insert are quickly made with sliding "L" pins. Fine adjustments then can be made utilizing the heavy-duty screw rod. Panels up to 30 ft. (9.1m) high are normally braced without knee braces or cross lacing.

Brace Weight: 155 lbs. (70kg)

BIG "G"TILT-UP BRACE

The Big "G" Brace is a Standard "G" Brace with a longer center pipe section. It is intended for use with panels over 30 ft. (9.1m) high. The Big "G" adjusts from 24 ft. to 39 ft. (7.3m to 11.8m). On very tall panels, knee braces and cross lacing can be used to increase brace spacing.

Brace Weight: 214 lbs. (97kg)

LITTLE "G" TILT-UP BRACE

The Little "G" Brace is a Standard "G" Brace with a shorter top inner pipe section. It is intended for use with panels up to 28 ft. (8.5m) high. The Little "G" adjusts from 14 ft. to 20 ft. (4.2m to 6.1m).

Brace Weight: 122 lbs. (55kg)

STANDARD BRACES • TILT-UP WALL CONSTRUCTION

Note: Make sure that proper pins (by manufacturer) are installed and locked per manufacturer's recommendations.

US&R SHORING OPERATIONS GUIDE
CONSTRUCTING LATERAL SHORING SYSTEMS

RAKER SHORE ALTERNATIVES

LATERAL WALL BRACING

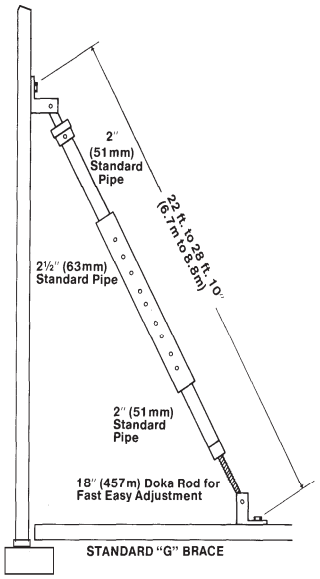

STANDARD "G" TILT-UP BRACE

Standard "G" Brace is designed for use with large tilt-up panels. Major adjustments within 12 inches (305mm) of the insert are quickly made with sliding "L" pins. Fine adjustments then can be made utilizing the heavy-duty screw rod. Panels up to 30 ft. (9.1m) high are normally braced without knee braces or cross lacing.

Brace Weight: 155 lbs. (70kg)

BIG "G"TILT-UP BRACE

The Big "G" Brace is a Standard "G" Brace with a longer center pipe section. It is intended for use with panels over 30 ft. (9.1m) high. The Big "G" adjusts from 24 ft. to 39 ft. (7.3m to 11.8m). On very tall panels, knee braces and cross lacing can be used to increase brace spacing.

Brace Weight: 214 lbs. (97kg)

LITTLE "G" TILT-UP BRACE

The Little "G" Brace is a Standard "G" Brace with a shorter top inner pipe section. It is intended for use with panels up to 28 ft. (8.5m) high. The Little "G" adjusts from 14 ft. to 20 ft. (4.2m to 6.1m).

Brace Weight: 122 lbs. (55kg)

STANDARD BRACES • TILT-UP WALL CONSTRUCTION

Note: Make sure that proper pins (by manufacturer) are installed and locked per manufacturer's recommendations.

3-30

RAKER & HORIZ. SHORES w/ PNEUMATIC STRUTS

Pneumatic Strut Manufacturers have developed special configurations that may be used to construct Raker and Horizontal Shores. See following pages for configurations.

- Individual Rakers can be configured from two struts plus a special wall plate rail, and special connections.
- Manufactured base plates can be connected into paving with 1" x 36" steel pickets driven through existing base plate holes.
- When system is constructed on soil, a special angle must be added to the base plate in order to bear on a standard Sole Anchor. (see page 3-9).
- A pair of Strut Rakers can be configured as a braced system, using wood X bracing that is connected to special clamp-on brackets that have wood nailers.
- When the Raker Strut is longer than 11 feet a mid-brace must be used, and the cross bracing must be a Double X. Note that the mid-brace must be a special strut that is able to resist both tension and compression.
- One manufacturer has developed a strut bracing system where the braces can resist both tension and compression forces.
- The Raker Rails must be connected to concrete/masonry walls using a minimum of two-1/2" x 5 ½" wedge anchors, or 1/2" x 8" rebar/smooth steel bars with 4" min. embedment in wall. (Two bars for 45 deg., and three bars for 60 deg. rakers).
- When supporting wood walls the Raker Rail must be carefully centered on a stud, and two 1/2" x 5" lag screws placed through the pre-drilled holes in the rail. 3/8" lead holes should be drilled at least 4" into the stud.
- Low pressure air (50psi max) may be used to extend the struts, but care must be taken to not impact the structure.
- Use hand tightening to snug-up all joints.
- See Section 7 for the tabled that give the Design Strength for Strut Raker Systems. Note that the connections that anchor the systems to wall and to ground may limit the strength. Consult a qualified Structures Specialist.

US&R SHORING OPERATIONS GUIDE
CONSTRUCTING LATERAL SHORING SYSTEMS

RAKER & HORIZ. SHORES w/ PNEUMATIC STRUTS

Pneumatic Strut Manufacturers have developed special configurations that may be used to construct Raker and Horizontal Shores. See following pages for configurations.

- Individual Rakers can be configured from two struts plus a special wall plate rail, and special connections.
- Manufactured base plates can be connected into paving with 1" x 36" steel pickets driven through existing base plate holes.
- When system is constructed on soil, a special angle must be added to the base plate in order to bear on a standard Sole Anchor. (see page 3-9).
- A pair of Strut Rakers can be configured as a braced system, using wood X bracing that is connected to special clamp-on brackets that have wood nailers.
- When the Raker Strut is longer than 11 feet a mid-brace must be used, and the cross bracing must be a Double X. Note that the mid-brace must be a special strut that is able to resist both tension and compression.
- One manufacturer has developed a strut bracing system where the braces can resist both tension and compression forces.
- The Raker Rails must be connected to concrete/masonry walls using a minimum of two-1/2" x 5 ½" wedge anchors, or 1/2" x 8" rebar/smooth steel bars with 4" min. embedment in wall. (Two bars for 45 deg., and three bars for 60 deg. rakers).
- When supporting wood walls the Raker Rail must be carefully centered on a stud, and two 1/2" x 5" lag screws placed through the pre-drilled holes in the rail. 3/8" lead holes should be drilled at least 4" into the stud.
- Low pressure air (50psi max) may be used to extend the struts, but care must be taken to not impact the structure.
- Use hand tightening to snug-up all joints.
- See Section 7 for the tabled that give the Design Strength for Strut Raker Systems. Note that the connections that anchor the systems to wall and to ground may limit the strength. Consult a qualified Structures Specialist.

3

3-31

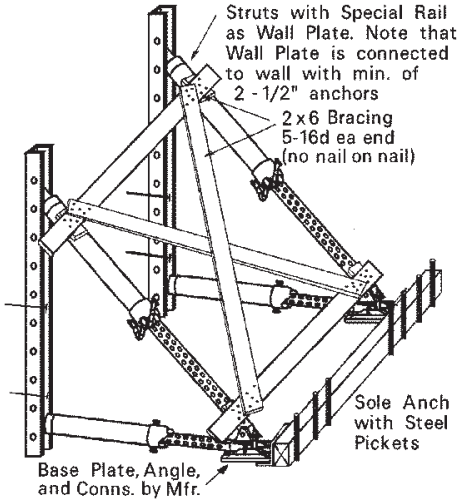

STRUT RAKER

This method uses Wood X Bracing, and length of Raker Strut is 11 feet or less.

Photo of raker using strut bracing – no wood needed

US&R SHORING OPERATIONS GUIDE
CONSTRUCTING LATERAL SHORING SYSTEMS

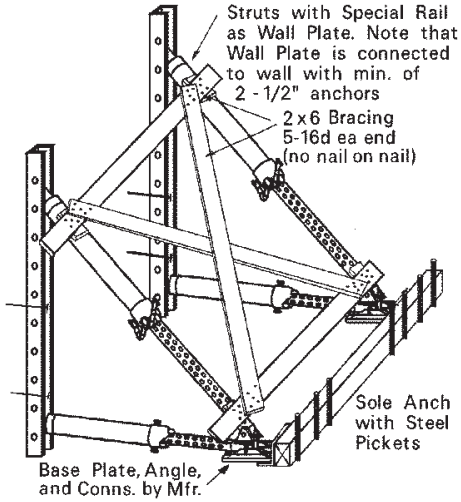

STRUT RAKER

This method uses Wood X Bracing, and length of Raker Strut is 11 feet or less.

Photo of raker using strut bracing – no wood needed

3-32

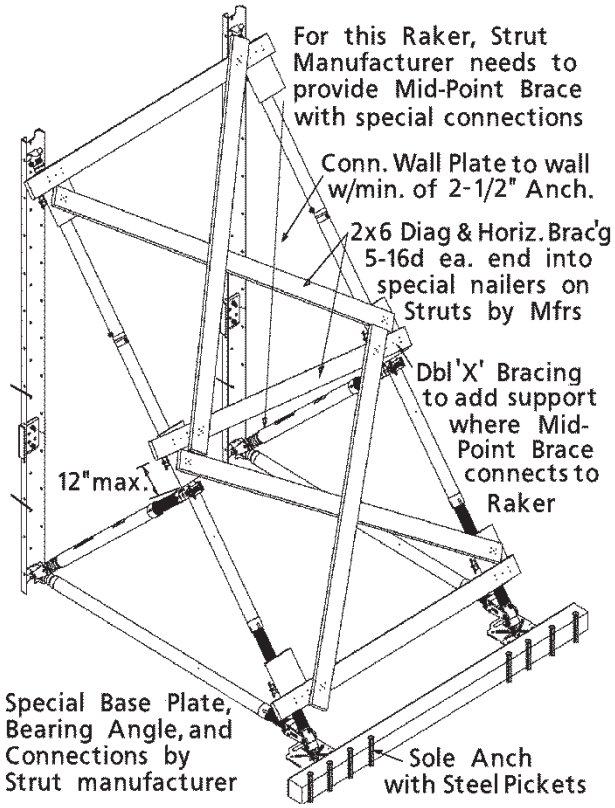

FULL TRIANGLE STRUT RAKER

In this case the Raker Strut is longer than 11 feet, so a mid-brace must be used as well as Double X-bracing.

US&R SHORING OPERATIONS GUIDE
CONSTRUCTING LATERAL SHORING SYSTEMS

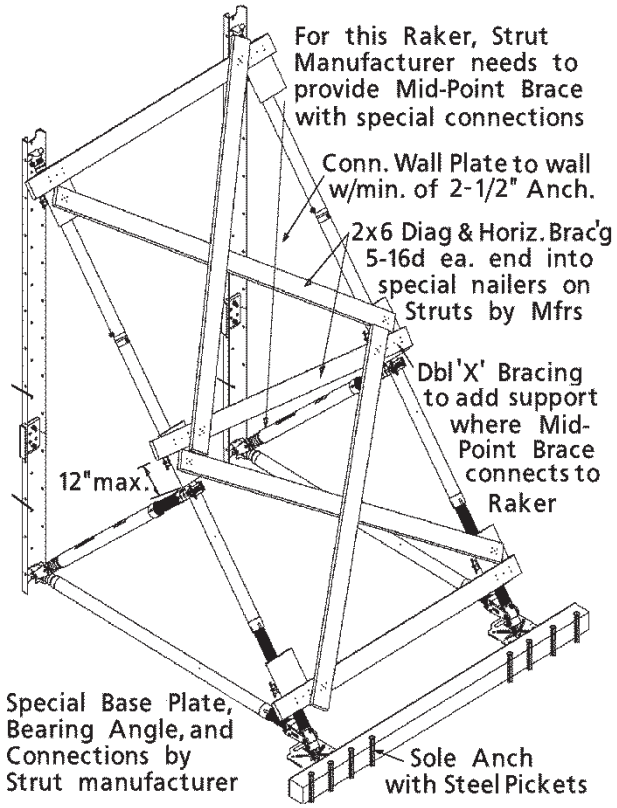

FULL TRIANGLE STRUT RAKER

In this case the Raker Strut is longer than 11 feet, so a mid-brace must be used as well as Double X-bracing.

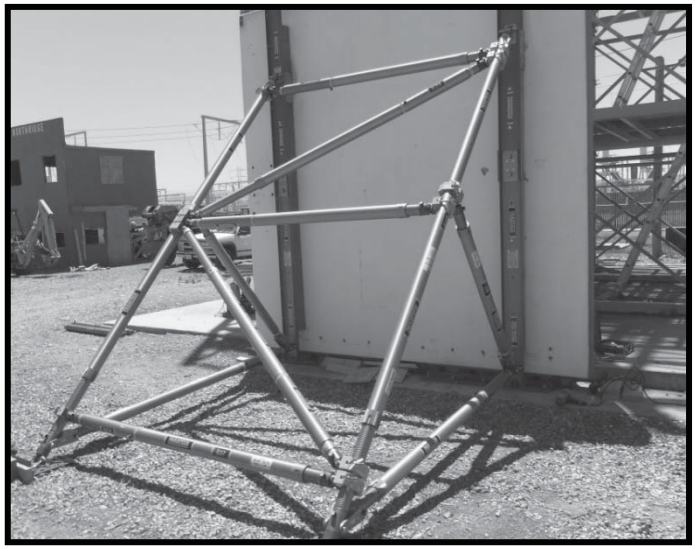

FULL TRIANGLE STRUT RAKER – ALL STRUTS

Photo of Raker Strut that is longer than 11 feet, and a Strut mid-brace is used as well as double X-bracing using Struts.

Note that the mid-brace, horizontal braces and diagonal braces must be special struts that can be adjusted for length, but remain rigid so that they can resist both tension and compression forces.

US&R SHORING OPERATIONS GUIDE
CONSTRUCTING LATERAL SHORING SYSTEMS

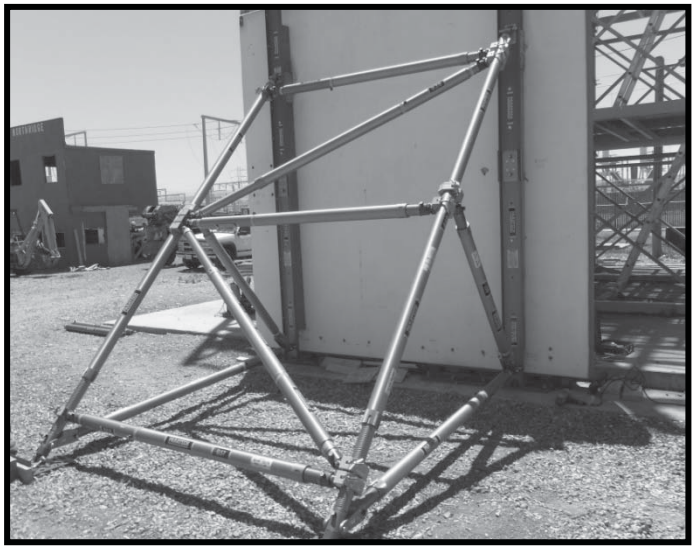

FULL TRIANGLE STRUT RAKER – ALL STRUTS
Photo of Raker Strut that is longer than 11 feet, and a Strut mid-brace is used as well as double X-bracing using Struts.

Note that the mid-brace, horizontal braces and diagonal braces must be special struts that can be adjusted for length, but remain rigid so that they can resist both tension and compression forces.

3-34

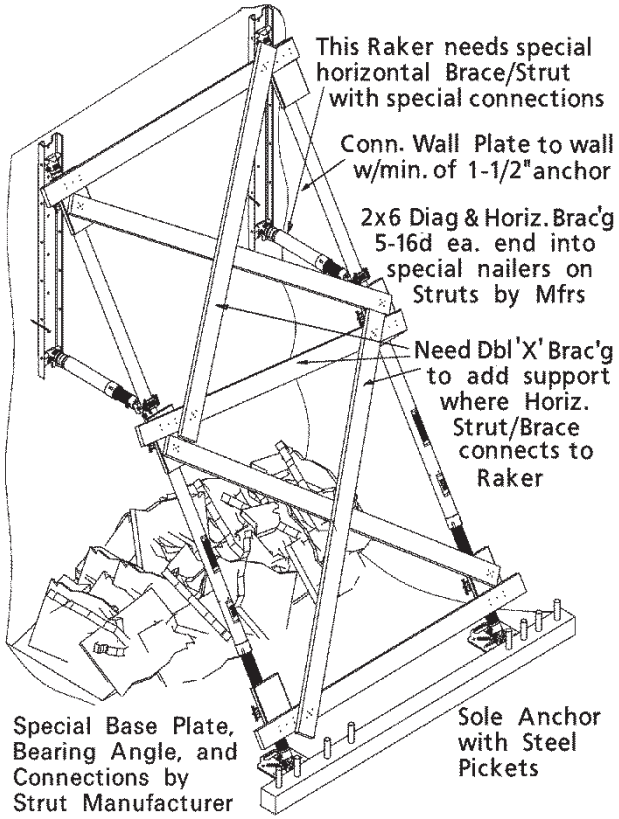

FLYING STRUT RAKER

This raker may be used as an initial, spot raker when there is a significant amount of debris at the base of the wall.

US&R SHORING OPERATIONS GUIDE
CONSTRUCTING LATERAL SHORING SYSTEMS

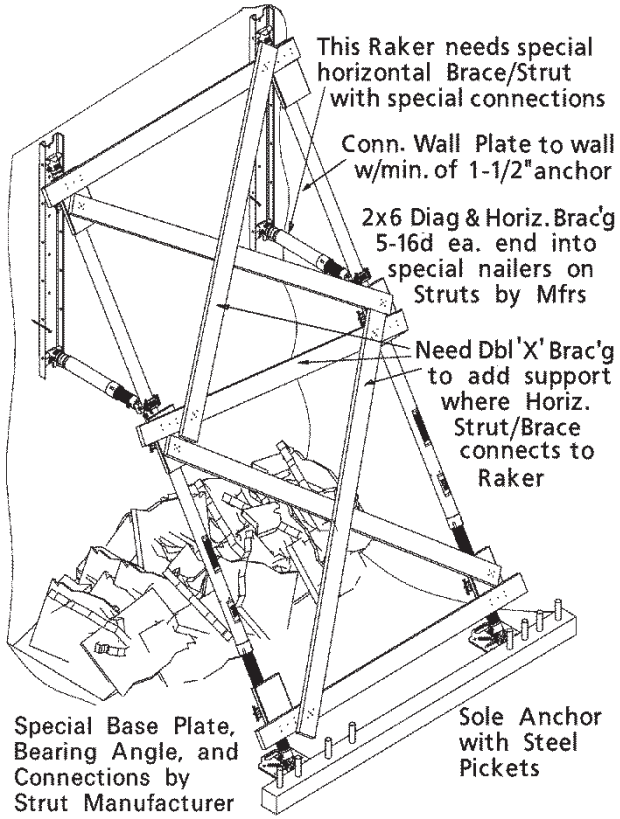

3

FLYING STRUT RAKER

This raker may be used as an initial, spot raker when there is a significant amount of debris at the base of the wall.

3-35

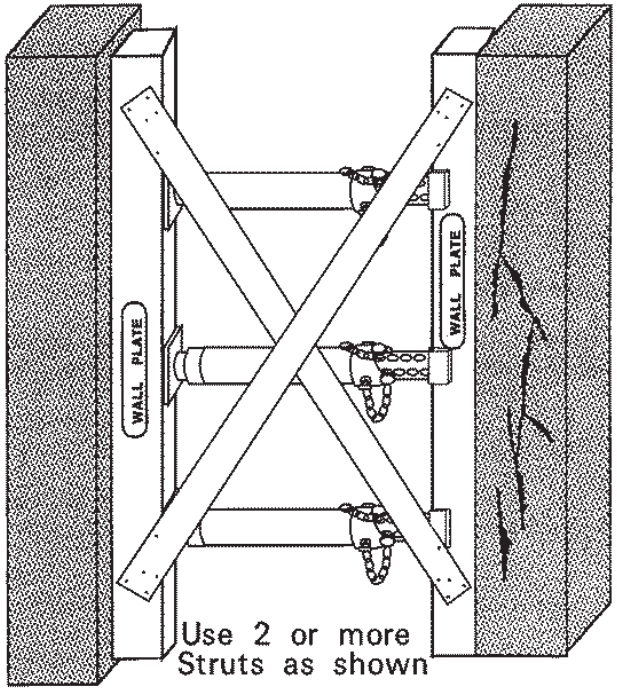

HORIZONTAL SHORE USING STRUTS

This shore would only be used if 4x4 wood struts were not available. As an alternative, if no wood was available, one could use the struts with a Raker Rail against each wall.

US&R SHORING OPERATIONS GUIDE
CONSTRUCTING LATERAL SHORING SYSTEMS

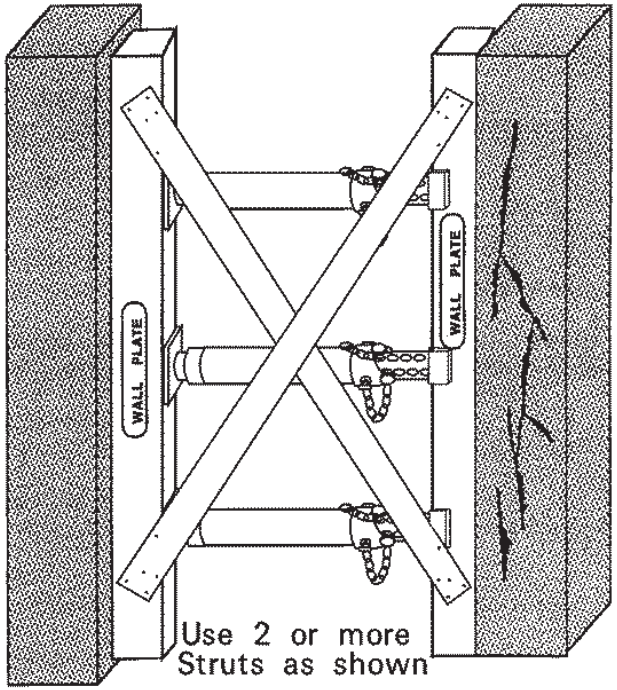

HORIZONTAL SHORE USING STRUTS

This shore would only be used if 4x4 wood struts were not available. As an alternative, if no wood was available, one could use the struts with a Raker Rail against each wall.

3-36

INTRODUCTION to SECTION 4

This section contains Repair Techniques for Damaged Structures and Frequently Asked Questions and their Answers for FEMA US&R Emergency Shoring, plus a Glossary of Terms, regarding Building Construction and Engineering.

The Repair Techniques are arranged as follows: Page

- Non-Contact Fiber Wrap 4-4
- Epoxy Concrete Repair 4-6
- Steel Jacket Column Repair 4-8
- Steel Jacket Joint Repair 4-10
- Column Stability Repair 4-12
- Spray Applied Concrete Repair 4-14
- Steel Straps Used To Confine Concrete 4-16
- Protected Entry 4-18
- Protective Barriers 4-19

The FAQ are arranged as follows: Page

- Headers 4-20
- Posts 4-21
- Laced Posts 4-22
- Cribbing & Window Shores 4-23
- Nails 4-23
- Raker Shores 4-26
- Diagonal Bracing 4-28
- Lumber Grade Adjustments 4-29
- Shoring Construction Sequence 4-31

The Glossary of Terms is arranged alphabetically, starting on Page 4-33.

Useful Engineering Tables are shown, starting on page 4-42 with a list of the included tables including page numbers.

US&R SHORING OPERATIONS GUIDE
REPAIRS, FAQ, GLOSSARY, & ENGINEERING TABLES

INTRODUCTION to SECTION 4

This section contains Repair Techniques for Damaged Structures and Frequently Asked Questions and their Answers for FEMA US&R Emergency Shoring, plus a Glossary of Terms, regarding Building Construction and Engineering.

The Repair Techniques are arranged as follows: Page

- Non-Contact Fiber Wrap 4-4
- Epoxy Concrete Repair 4-6
- Steel Jacket Column Repair 4-8
- Steel Jacket Joint Repair 4-10
- Column Stability Repair 4-12
- Spray Applied Concrete Repair 4-14
- Steel Straps Used To Confine Concrete 4-16
- Protected Entry 4-18
- Protective Barriers 4-19

4

The FAQ are arranged as follows: Page

- Headers 4-20
- Posts 4-21
- Laced Posts 4-22
- Cribbing & Window Shores 4-23
- Nails 4-23
- Raker Shores 4-26
- Diagonal Bracing 4-28
- Lumber Grade Adjustments 4-29
- Shoring Construction Sequence 4-31

The Glossary of Terms is arranged alphabetically, starting on Page 4-33.

Useful Engineering Tables are shown, starting on page 4-42 with a list of the included tables including page numbers.

4-1

Repair Techniques

Introduction

The strengthening and repair of structural members, components, joints and systems during disaster operations requires innovative design solutions, coordination with contractors and consideration of time and risk.

There are no textbook solutions or systems that can be deployed that do not require forethought and engineering expertise.

Following are examples and ideas that can be, or have been, used in past disasters to stabilize, repair or strengthen structural buildings and their components during search and rescue operations.

They are presented so that the user has a toolbox of alternatives to consider when faced with similar challenges.

US&R SHORING OPERATIONS GUIDE
REPAIRS, FAQ, GLOSSARY, & ENGINEERING TABLES

Repair Techniques

Introduction

The strengthening and repair of structural members, components, joints and systems during disaster operations requires innovative design solutions, coordination with contractors and consideration of time and risk.

There are no textbook solutions or systems that can be deployed that do not require forethought and engineering expertise.

Following are examples and ideas that can be, or have been, used in past disasters to stabilize, repair or strengthen structural buildings and their components during search and rescue operations.

They are presented so that the user has a toolbox of alternatives to consider when faced with similar challenges.

4-2

This page is blank

US&R SHORING OPERATIONS GUIDE
REPAIRS, FAQ, GLOSSARY, & ENGINEERING TABLES

This page is blank

4

4-3

NON-CONTACT FIBER WRAPS

Repair/Retrofit Method: Grout Filled Fiber Plastic Shell

Grout Filled FRP Shell: used as a high strength, grout filled form around damaged members. Used for: column confinement; column reinforcing; member stabilization; & component strengthening.

Manufacturers:
See Internet

Applications
This grout filled, custom formed FRP Wrap can be applied to damaged steel, concrete or wood members, spalled concrete regions to maintain residual strength or increase strength.

Considerations/Limitations
Competent Professional Engineer is required for use.

Manufacturer input is essential for application and use.

FRP cylindrical shell can be fabricated, in-place, to any reasonable size. Wrap is available in 4ft wide rolls.

Must have access to all sides of damaged structure.

Application Procedure
Determine the required diameter and height of the shell.

Cut a strip of the wrap material to be the desired height, and about 7 times the desired diameter (allows for a double wrap plus 8”(150 mm) overlap.

Use a trowel to apply the special 2-part, paste, epoxy to the outer 60% length of the wrap, prior to installation. (note that a similar system using water activated epoxy bands is under development)

Form the wrap into a cylindrical shell around the damaged structure as a double wrap plus about 8”.

Temporarily hold the cylinder's shape using nylon ratchet straps in at least two locations within its height. The cylinder may touch the damaged structure at the corners, but it is better if there is at least 1/2” clearance.

Mix and place high-strength, non-shrink cementations grout. Pressure of the grout will tighten the wrap layers. Depending on grout, cure time could be 4hrs or more.

US&R SHORING OPERATIONS GUIDE
REPAIRS, FAQ, GLOSSARY, & ENGINEERING TABLES

NON-CONTACT FIBER WRAPS

Repair/Retrofit Method: Grout Filled Fiber Plastic Shell

Grout Filled FRP Shell: used as a high strength, grout filled form around damaged members. Used for: column confinement; column reinforcing; member stabilization; & component strengthening.

Manufacturers:
See Internet

Applications
This grout filled, custom formed FRP Wrap can be applied to damaged steel, concrete or wood members, spalled concrete regions to maintain residual strength or increase strength.

Considerations/Limitations
Competent Professional Engineer is required for use.

Manufacturer input is essential for application and use.

FRP cylindrical shell can be fabricated, in-place, to any reasonable size. Wrap is available in 4ft wide rolls.

Must have access to all sides of damaged structure.

Application Procedure
Determine the required diameter and height of the shell.

Cut a strip of the wrap material to be the desired height, and about 7 times the desired diameter (allows for a double wrap plus 8”(150 mm) overlap.

Use a trowel to apply the special 2-part, paste, epoxy to the outer 60% length of the wrap, prior to installation. (note that a similar system using water activated epoxy bands is under development)

Form the wrap into a cylindrical shell around the damaged structure as a double wrap plus about 8”.

Temporarily hold the cylinder's shape using nylon ratchet straps in at least two locations within its height. The cylinder may touch the damaged structure at the corners, but it is better if there is at least 1/2” clearance.

Mix and place high-strength, non-shrink cementations grout. Pressure of the grout will tighten the wrap layers. Depending on grout, cure time could be 4hrs or more.

4-4

Installation Sequence:

1. Trowel on 2-part epoxy.
2. Initially place FRP cylindrical shell.
3. Adjust the shell so the 2 layers are in contact.
4. Place ratchet straps to temporarily hold the shell's shape.
5. Mix and pour the non-shrink grout, and use small vibrator or rod to consolidate.

US&R SHORING OPERATIONS GUIDE
REPAIRS, FAQ, GLOSSARY, & ENGINEERING TABLES

4

Installation Sequence:

1. Trowel on 2-part epoxy.
2. Initially place FRP cylindrical shell.
3. Adjust the shell so the 2 layers are in contact.
4. Place ratchet straps to temporarily hold the shell's shape.
5. Mix and pour the non-shrink grout, and use small vibrator or rod to consolidate.

4-5

EPOXY CONCRETE REPAIRS

Repair/Retrofit Method: Epoxy Injected Aggregate

Pre-placed aggregate is injected with low-viscosity in order to strengthen badly damaged, oddly shaped structural joints.

Manufacturers:
See Internet

Applications
Create a form (using various materials) around the damaged concrete regions to encompass the repair area. Clean, pea-gravel aggregate is carefully placed in the form, and then injected (starting at the bottom) with low-viscosity epoxy. This method is most applicable for repairing badly damaged joints that are difficult to surround using cylindrical shells or jackets.

Considerations/Limitations
Competent Professional Engineer is required for use.

Manufacturer input is essential for application and use.

Plaster covered metal lath has been used as a custom fit form. Plywood has also been used as a form.

Aggregate must be clean any have uniform size in order to allow the epoxy to flow into the voids.

The epoxy should be injected starting at the lowest point of the formed repair, and ports should be placed every 4” (100 mm) above so that epoxy can be seen to slowly rise within the aggregate. As the epoxy reaches each successive port the lower one should be closed, and then epoxy injected into the port at the current level of the epoxy.

It is very important to use the proper, low-viscosity epoxy in order to avoid having the curing reaction generate too much heat (exothermic reaction). Consult epoxy manufacturer and knowledgeable, specialty contractor.

Cure times for epoxy vary. Consult the Manufacturer.

US&R SHORING OPERATIONS GUIDE
REPAIRS, FAQ, GLOSSARY, & ENGINEERING TABLES

EPOXY CONCRETE REPAIRS

Repair/Retrofit Method: Epoxy Injected Aggregate

Pre-placed aggregate is injected with low-viscosity in order to strengthen badly damaged, oddly shaped structural joints.

Manufacturers:
See Internet

Applications
Create a form (using various materials) around the damaged concrete regions to encompass the repair area. Clean, pea-gravel aggregate is carefully placed in the form, and then injected (starting at the bottom) with low-viscosity epoxy. This method is most applicable for repairing badly damaged joints that are difficult to surround using cylindrical shells or jackets.

Considerations/Limitations
Competent Professional Engineer is required for use.

Manufacturer input is essential for application and use.

Plaster covered metal lath has been used as a custom fit form. Plywood has also been used as a form.

Aggregate must be clean any have uniform size in order to allow the epoxy to flow into the voids.

The epoxy should be injected starting at the lowest point of the formed repair, and ports should be placed every 4” (100 mm) above so that epoxy can be seen to slowly rise within the aggregate. As the epoxy reaches each successive port the lower one should be closed, and then epoxy injected into the port at the current level of the epoxy.

It is very important to use the proper, low-viscosity epoxy in order to avoid having the curing reaction generate too much heat (exothermic reaction). Consult epoxy manufacturer and knowledgeable, specialty contractor.

Cure times for epoxy vary. Consult the Manufacturer.

4-6

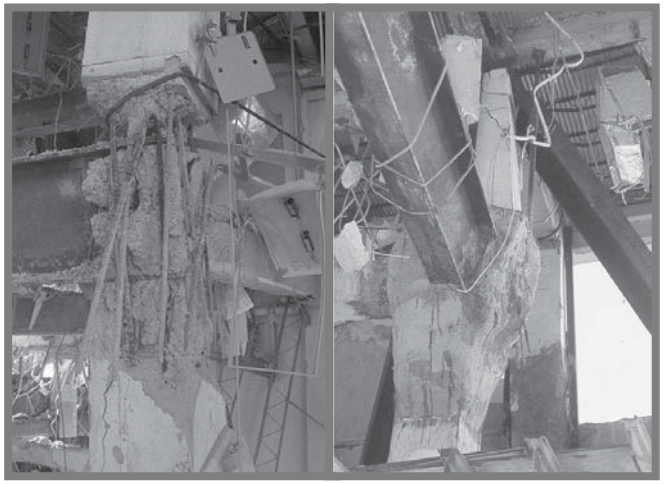

Before After

Repair of Badly Damaged Column in Puerto Rico

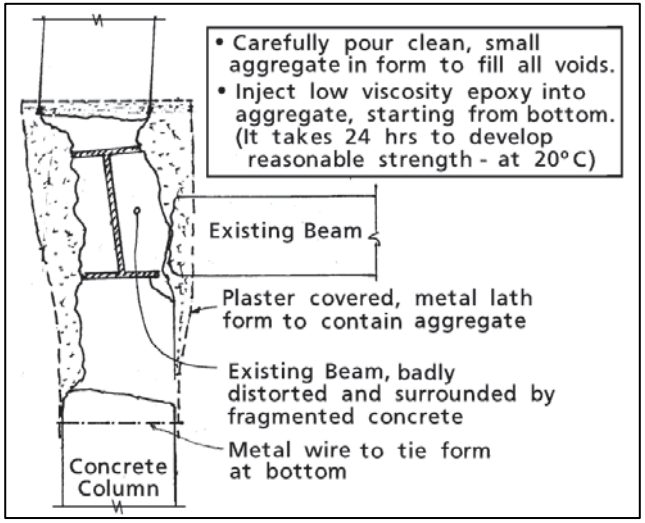

US&R SHORING OPERATIONS GUIDE
REPAIRS, FAQ, GLOSSARY, & ENGINEERING TABLES

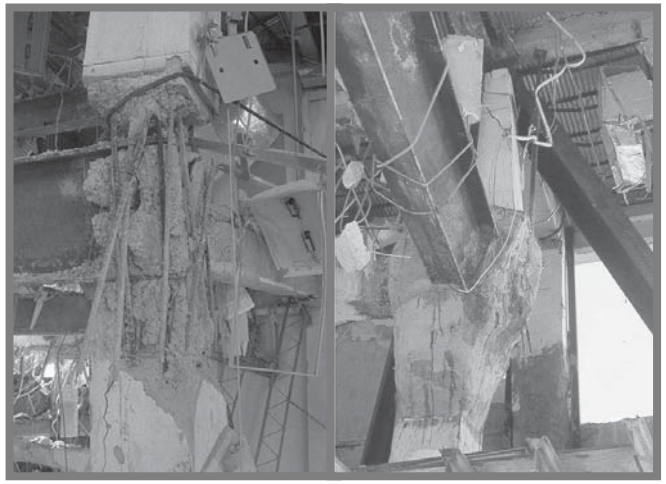

Before After

Repair of Badly Damaged Column in Puerto Rico

4

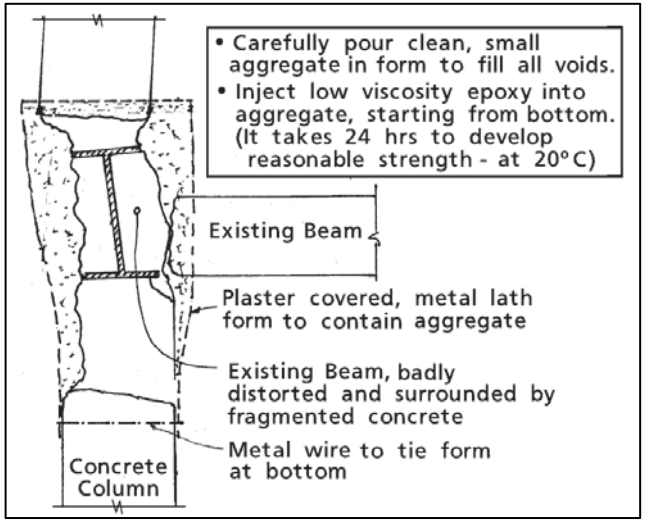

4-7

STEEL JACKET COLUMN REPAIR

Repair/Retrofit Method: Concrete filled Steel Jacket

Jacket a damaged column with full height steel shell and fill with structural concrete for stability and/or strengthening.

Manufacturers:
See IST Struct. Spec for local contractor & fabrication shop.

Applications
Primarily used for damaged columns. Applicable to any type of column (concrete, steel, etc).

Considerations/Limitations
Competent Professional Engineer is required for use.

Steel encasement is prefabricated in two half rounds and bolted and/or welded together. Bolting is preferred since less time is spent in danger area during erection.

Steel encasement is 3/16” to 1/4” (4 to 6 mm) thick.

Encasement should clear damaged column by at least 3” (80 mm)

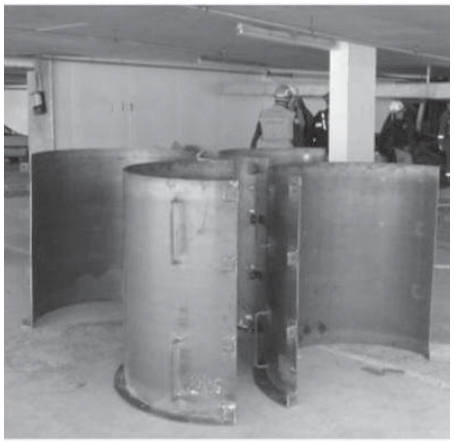

This photo shows a set of half-round steel encasements just prior to erection. Note that the steel encasement is stacked two high in this installation.

US&R SHORING OPERATIONS GUIDE
REPAIRS, FAQ, GLOSSARY, & ENGINEERING TABLES

STEEL JACKET COLUMN REPAIR

Repair/Retrofit Method: Concrete filled Steel Jacket

Jacket a damaged column with full height steel shell and fill with structural concrete for stability and/or strengthening.

Manufacturers:
See IST Struct. Spec for local contractor & fabrication shop.

Applications
Primarily used for damaged columns. Applicable to any type of column (concrete, steel, etc).

Considerations/Limitations
Competent Professional Engineer is required for use.

Steel encasement is prefabricated in two half rounds and bolted and/or welded together. Bolting is preferred since less time is spent in danger area during erection.

Steel encasement is 3/16” to 1/4” (4 to 6 mm) thick.

Encasement should clear damaged column by at least 3” (80 mm)

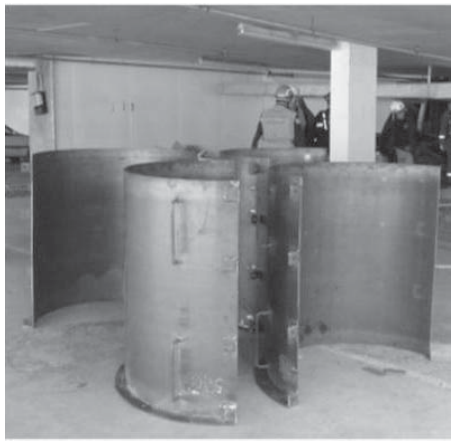

This photo shows a set of half-round steel encasements just prior to erection. Note that the steel encasement is stacked two high in this installation.

4-8

Damaged columns with completed encasement

US&R SHORING OPERATIONS GUIDE
REPAIRS, FAQ, GLOSSARY, & ENGINEERING TABLES

4

Damaged columns with completed encasement

STEEL JACKET JOINT REPAIR

Repair/Retrofit Method: Grout Filled Steel Jacket

Jacket column joint with steel shell and fill with fast setting, high strength non-shrink grout for stability and/or strengthening.

Manufacturers:
See IST Struct. Spec for local contractor & fabrication shop.

Applications
Primarily used for damaged column joints. Applicable to any type of column. Shown below for large concrete column joint retrofit. Steel encasement was prefabricated from four steel angles and four steel plates. It was prefabricated as two halves, then erected and welded at the two unconnected corners.

Considerations/Limitations
Competent Professional Engineer is required for use.

The space between the column and jacket should be kept small in order to minimize the thickness of the grout.

The steel used for a square jacket needs to be in the range of 3/8” minimum thickness.

For ease of fabrication the corners should be made using steel angles. (L3 x 3 x 5/16” minimum)

Temporary forms will usually be needed that are placed on sound concrete below the jacket, in order to support it and keep the grout in place until it hardens.

High strength, cementations, non-shrink grout should be used. It is available in bags, can be mixed in the field, and can attain strengths exceeding normal concrete in 12 to 24 hours (depending on outside temperature).

The steel jacket may be heavy, with each side weighing 100 lbs (45 kg) or more. Therefore some sort of equipment may be require to lift it into place.

US&R SHORING OPERATIONS GUIDE
REPAIRS, FAQ, GLOSSARY, & ENGINEERING TABLES

STEEL JACKET JOINT REPAIR

Repair/Retrofit Method: Grout Filled Steel Jacket

Jacket column joint with steel shell and fill with fast setting, high strength non-shrink grout for stability and/or strengthening.

Manufacturers:
See IST Struct. Spec for local contractor & fabrication shop.

Applications
Primarily used for damaged column joints. Applicable to any type of column. Shown below for large concrete column joint retrofit. Steel encasement was prefabricated from four steel angles and four steel plates. It was prefabricated as two halves, then erected and welded at the two unconnected corners.

Considerations/Limitations
Competent Professional Engineer is required for use.

The space between the column and jacket should be kept small in order to minimize the thickness of the grout.

The steel used for a square jacket needs to be in the range of 3/8” minimum thickness.

For ease of fabrication the corners should be made using steel angles. (L3 x 3 x 5/16” minimum)

Temporary forms will usually be needed that are placed on sound concrete below the jacket, in order to support it and keep the grout in place until it hardens.

High strength, cementations, non-shrink grout should be used. It is available in bags, can be mixed in the field, and can attain strengths exceeding normal concrete in 12 to 24 hours (depending on outside temperature).

The steel jacket may be heavy, with each side weighing 100 lbs (45 kg) or more. Therefore some sort of equipment may be require to lift it into place.

4-10

This steel jacket was used to provide strengthening at several column joints at the bomb damaged Murrah Federal Office Building in Oklahoma City.

It was placed where the concrete floor beam had been blown away from the concrete column, leaving a badly cracked, and unbraced joint.

US&R SHORING OPERATIONS GUIDE
REPAIRS, FAQ, GLOSSARY, & ENGINEERING TABLES

4

This steel jacket was used to provide strengthening at several column joints at the bomb damaged Murrah Federal Office Building in Oklahoma City.

It was placed where the concrete floor beam had been blown away from the concrete column, leaving a badly cracked, and unbraced joint.

4-11

COLUMN STABILITY REPAIR

Repair/Retrofit Method: Column Length Bracing

Supporting columns and reducing the column length with bracing members.

Manufacturers:
See IST Struct. Spec for local contractor & fabrication shop.

Applications
Primarily used for damaged columns that have become unsupported at floor levels. Applicable to any type of column. Additional bracing members attached to column in critical buckling directions. Steel pipes or tubes are commonly used for bracing members.

Considerations/Limitations
Competent Professional Engineer is required for use.

Bracing should be provided in the north-south as well as east-west direction at each level where the floors have been dislodged, if possible.

Braces need to be of sufficient size to resist both compression and tension forces.

Braces need to be positively connected at each end and the anchoring structure must be adequately strong and rigid.

The minimum design force for the braces should be at least 2 percent of the total force in the damaged column. If the column is mis-aligned, the design force should be 5 percent minimum.

US&R SHORING OPERATIONS GUIDE
REPAIRS, FAQ, GLOSSARY, & ENGINEERING TABLES

COLUMN STABILITY REPAIR

Repair/Retrofit Method: Column Length Bracing

Supporting columns and reducing the column length with bracing members.

Manufacturers:
See IST Struct. Spec for local contractor & fabrication shop.

Applications
Primarily used for damaged columns that have become unsupported at floor levels. Applicable to any type of column. Additional bracing members attached to column in critical buckling directions. Steel pipes or tubes are commonly used for bracing members.

Considerations/Limitations
Competent Professional Engineer is required for use.

Bracing should be provided in the north-south as well as east-west direction at each level where the floors have been dislodged, if possible.

Braces need to be of sufficient size to resist both compression and tension forces.

Braces need to be positively connected at each end and the anchoring structure must be adequately strong and rigid.

The minimum design force for the braces should be at least 2 percent of the total force in the damaged column. If the column is mis-aligned, the design force should be 5 percent minimum.

4-12

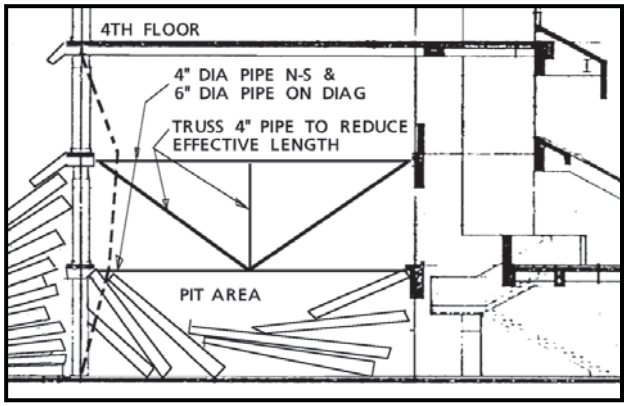

This cross-section at the Murrah Federal Office Building in Oklahoma City shows how a truss work of pipes was used to laterally brace Columns F22 and F20. The floors on all sides of these columns had collapsed up to the 4th Fl, and they were in danger of collapsing as the debris was being removed to access the buried victims.

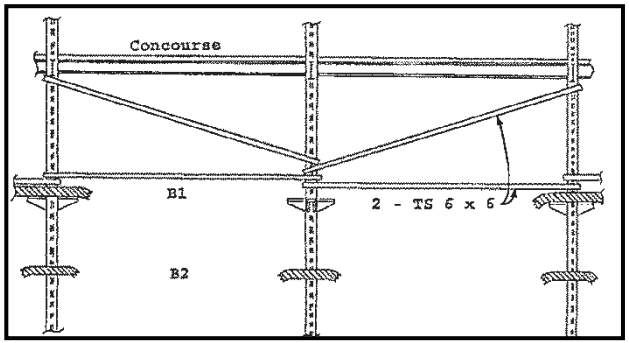

This schematic, partial cross-section of the World Trade Center Basement following the 1993 Truck Bombing shows the configuration of steel tube bracing that was used to brace the steel basement columns after the basement parking garage concrete floor slabs had collapsed, leaving the steel columns standing 70 ft tall without lateral support.

US&R SHORING OPERATIONS GUIDE
REPAIRS, FAQ, GLOSSARY, & ENGINEERING TABLES

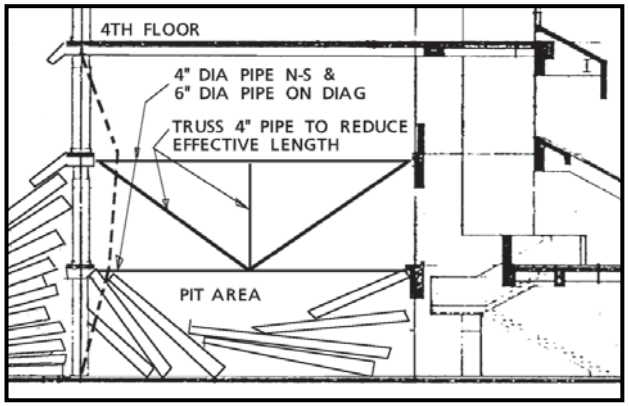

This cross-section at the Murrah Federal Office Building in Oklahoma City shows how a truss work of pipes was used to laterally brace Columns F22 and F20. The floors on all sides of these columns had collapsed up to the 4th Fl, and they were in danger of collapsing as the debris was being removed to access the buried victims.

4

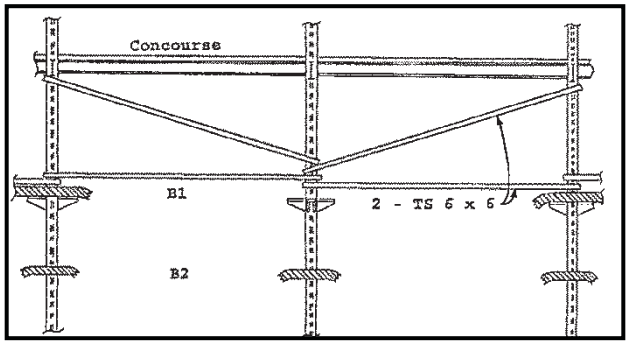

This schematic, partial cross-section of the World Trade Center Basement following the 1993 Truck Bombing shows the configuration of steel tube bracing that was used to brace the steel basement columns after the basement parking garage concrete floor slabs had collapsed, leaving the steel columns standing 70 ft tall without lateral support.

4-13

SPRAY APPLIED CONCRETE REPAIR

Repair/Retrofit Method: Shotcrete/Gunite, Cementitious Spray-on Concrete/Mortar.

Spray on concrete type material that can stabilize or strengthen members, components and systems.

Manufacturers:
Local Contractors, especially those with swimming pool experience.

Applications
Damaged concrete regions are stabilized or strengthened with sprayed-on concrete type material (Gunite/Shotcrete, Air Blown Concrete). The affected area is encased with a concrete outer shell. Reinforcing steel or mesh may be placed first, in order to provide greater strength.

Considerations/Limitations
Competent Professional Engineer is required for use.

Application Contractor's input is essential to determine limitations and required logistics.

The shotcrete requires at least 5 days to develop half of its strength, and 21 days to develop about 90% strength.

The shotcrete should be cured by applying a moisture preserving seal-coat and/or keeping the surface damp.

For greater reliability an above grade footing should be poured completely around the base of the wall, prior to applying the shotcrete.

See next page for use of shotcrete in New Zealand, March 2011.

US&R SHORING OPERATIONS GUIDE
REPAIRS, FAQ, GLOSSARY, & ENGINEERING TABLES

SPRAY APPLIED CONCRETE REPAIR

Repair/Retrofit Method: Shotcrete/Gunite, Cementitious Spray-on Concrete/Mortar.

Spray on concrete type material that can stabilize or strengthen members, components and systems.

Manufacturers:
Local Contractors, especially those with swimming pool experience.

Applications
Damaged concrete regions are stabilized or strengthened with sprayed-on concrete type material (Gunite/Shotcrete, Air Blown Concrete). The affected area is encased with a concrete outer shell. Reinforcing steel or mesh may be placed first, in order to provide greater strength.

Considerations/Limitations
Competent Professional Engineer is required for use.

Application Contractor's input is essential to determine limitations and required logistics.

The shotcrete requires at least 5 days to develop half of its strength, and 21 days to develop about 90% strength.

The shotcrete should be cured by applying a moisture preserving seal-coat and/or keeping the surface damp.

For greater reliability an above grade footing should be poured completely around the base of the wall, prior to applying the shotcrete.

See next page for use of shotcrete in New Zealand, March 2011.

4-14

Wall Before Shotcrete

Wall After Shotcrete

Overall View of Repair Using Shotcrete

US&R SHORING OPERATIONS GUIDE
REPAIRS, FAQ, GLOSSARY, & ENGINEERING TABLES

Wall Before Shotcrete

Wall After Shotcrete

4

Overall View of Repair Using Shotcrete

4-15

STEEL STRAPS USED TO CONFINE CONCRETE

Repair/Retrofit Method: Steel Strapping Tape

Confinement of damaged concrete members using Heavy Duty Steel Strapping.

Manufacturers/Distributers:
Globalindustrial.com, Uline.com, & others, see Internet

Applications
Damaged concrete members can be confined by binding the damaged area with many layers/widths of steel strapping.

Considerations/Limitations

Easy to use and apply. Available locally.

Confinement of damaged concrete members can be improved easily.

Strapping may be applied around wood and/or plywood spreaders to better confine the concrete.

Strapping is available in 1/2”, 5/8”, and 3/4” wide rolls (10 to 20 mm) in varying gauges.

Proper installation requires tools to tighten, clamp the seal and cut the strap as shown below.

US&R SHORING OPERATIONS GUIDE
REPAIRS, FAQ, GLOSSARY, & ENGINEERING TABLES

STEEL STRAPS USED TO CONFINE CONCRETE

Repair/Retrofit Method: Steel Strapping Tape

Confinement of damaged concrete members using Heavy Duty Steel Strapping.

Manufacturers/Distributers:
Globalindustrial.com, Uline.com, & others, see Internet

Applications
Damaged concrete members can be confined by binding the damaged area with many layers/widths of steel strapping.

Considerations/Limitations

Easy to use and apply. Available locally.

Confinement of damaged concrete members can be improved easily.

Strapping may be applied around wood and/or plywood spreaders to better confine the concrete.

Strapping is available in 1/2”, 5/8”, and 3/4” wide rolls (10 to 20 mm) in varying gauges.

Proper installation requires tools to tighten, clamp the seal and cut the strap as shown below.

4-16

Column F-22 at the Murrah Federal Office Building in Oklahoma City, where the Third Floor used to be.

Steel strapping was used as a temporary measure prior to installing a grout filled steel jacket.

US&R SHORING OPERATIONS GUIDE
REPAIRS, FAQ, GLOSSARY, & ENGINEERING TABLES

4

Column F-22 at the Murrah Federal Office Building in Oklahoma City, where the Third Floor used to be.

Steel strapping was used as a temporary measure prior to installing a grout filled steel jacket.

4-17

PROTECTED ENTRY

Repair/Retrofit Method: Use rigid pipe/casing for access.

Use rigid pipe or pile casing to provide access protected from falling hazards.

Manufacturers/Distributers:
Local contractors. See Internet

Applications
Steel, ductile iron, or concrete pipes, or steel pile casings can be pushed into a damaged building to provide protection from falling hazards originating from the exterior walls. Pipes may be pushed into the structure using heavy equipment such as; forklift, front end loader, or excavator.

Considerations/Limitations

Easy to use, and is available locally.

Steel or ductile iron pipes, as well as steel casings should be available in 20ft (6m) lengths, that can be pushed together to form longer lengths.

Steel, ductile iron pipe, or steel casings should be a minimum of 1/2” (13 mm) thick.

Concrete pipes should be available in 10ft (3m) lengths and longer. They have tight fitting joints.

Pipes should be 3ft (1m) or greater in diameter.

Rescuers may need to enter the pipe to remove collected debris, in order to get it into place.

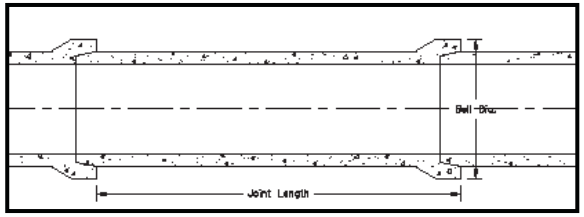

Typical Concrete Pipe Configuration

US&R SHORING OPERATIONS GUIDE
REPAIRS, FAQ, GLOSSARY, & ENGINEERING TABLES

PROTECTED ENTRY

Repair/Retrofit Method: Use rigid pipe/casing for access.

Use rigid pipe or pile casing to provide access protected from falling hazards.

Manufacturers/Distributers:
Local contractors. See Internet

Applications
Steel, ductile iron, or concrete pipes, or steel pile casings can be pushed into a damaged building to provide protection from falling hazards originating from the exterior walls. Pipes may be pushed into the structure using heavy equipment such as; forklift, front end loader, or excavator.

Considerations/Limitations

Easy to use, and is available locally.

Steel or ductile iron pipes, as well as steel casings should be available in 20ft (6m) lengths, that can be pushed together to form longer lengths.

Steel, ductile iron pipe, or steel casings should be a minimum of 1/2” (13 mm) thick.

Concrete pipes should be available in 10ft (3m) lengths and longer. They have tight fitting joints.

Pipes should be 3ft (1m) or greater in diameter.

Rescuers may need to enter the pipe to remove collected debris, in order to get it into place.

Typical Concrete Pipe Configuration

4-18

PROTECTIVE BARRIERS

Repair/Retrofit Method: Use Rigid Containers & Boxes as Barriers.

Use shipping containers and/or rigid boxes as protective barriers.

Manufacturers/Distributers:
Shipping companies, Concrete vault suppliers, and waste disposal companies. See internet

Applications
Use shipping containers, dumpsters, and/or concrete vaults as barriers adjacent to hazardous buildings and vulnerable rock faces.

Considerations/Limitations

Easy to use, and available locally.

Shipping containers are available in 20, 40, 45 and 48 foot lengths.

Steel debris boxes (dumpsters) may also be used, and are available in 3, 5, 8, 15, 18, 20, 30, and 40 cubic yard sizes.

These rigid containers can be ballasted with heavy objects, such as water bladders, sand bags, and steel scrap, in order to add sliding and overturning resistance.

Containers may be stacked up to 3-high, but should be connected together using chains or high strength straps.

Containers may be placed 2-wide to improve resistance.

US&R SHORING OPERATIONS GUIDE
REPAIRS, FAQ, GLOSSARY, & ENGINEERING TABLES

PROTECTIVE BARRIERS

Repair/Retrofit Method: Use Rigid Containers & Boxes as Barriers.

Use shipping containers and/or rigid boxes as protective barriers.

Manufacturers/Distributers:
Shipping companies, Concrete vault suppliers, and waste disposal companies. See internet

Applications
Use shipping containers, dumpsters, and/or concrete vaults as barriers adjacent to hazardous buildings and vulnerable rock faces.

Considerations/Limitations

Easy to use, and available locally.

Shipping containers are available in 20, 40, 45 and 48 foot lengths.

Steel debris boxes (dumpsters) may also be used, and are available in 3, 5, 8, 15, 18, 20, 30, and 40 cubic yard sizes.

These rigid containers can be ballasted with heavy objects, such as water bladders, sand bags, and steel scrap, in order to add sliding and overturning resistance.

Containers may be stacked up to 3-high, but should be connected together using chains or high strength straps.

Containers may be placed 2-wide to improve resistance.

4

4-19

FREQUENTLY ASKED QUESTIONS

HEADERS

Question H-1 What to do if need 4x6 header and only have 4x4 and 2x4 material?

Ans.H-1a Nail 2x4 to top of 4x4 with 16d@3" o.c. This build-up is about 80% as strong as 4x6

Ans.H-1b Stack 2-4x4 and toenail together. This build-up is slightly stronger than 4x6

Ans.H-1c Place 2-2x6 side-by-side with ½" or ¾" plywood in between. Inter-nail with 16d@6″ o.c., stagger.

Question H-2 What to do if need 4x8 header and only have 4x4 and 2x4 material?

Ans.H-2 Stack 2-4x4 and place ½" or ¾" plywood each side. Nail 8d@3" o.c. each side to each 4x4. (stop ply short of posts)

Question H-3 How big of a Header is needed?

Ans.H-3a To support a damaged wood structure, use a 4x4 header as minimum and add 1" to depth for each additional foot of clear span larger than 4 ft. Example use 4x6 for 5 ft span and 4x8 for 8 ft spans. For 6x6 posts you may use a 6x6 header for 5ft o.c.

Ans.H-3b To support a damaged concrete structure, header size depends on the condition of the concrete structure.

- To support a minimally cracked concrete beam or slab, with 4x4 posts spaced at 4 ft o.c., use a 6x6 header with 6x6 post spaced 5ft o.c. Since the concrete structure is stiffer and stronger than most any wood header, the concrete will span between posts so the header functions mostly as an interconnection of the posts and diagonal bracing.
- To support badly cracked concrete slabs and beams, the header should be sized by the Structures Specialist (StS)

  If StS is not available, then use 4x8 header for 4x4x 8ft long posts (8000lb capacity) spaced up to 4 feet. Use 6x12 for 6x6x12ft long posts for spans up to 4ft. For 5ft spans the capacity would be reduced by 10%, and for 6ft spans the capacity would be reduced by 25%.

US&R SHORING OPERATIONS GUIDE
REPAIRS, FAQ, GLOSSARY, & ENGINEERING TABLES

FREQUENTLY ASKED QUESTIONS

HEADERS

Question H-1 What to do if need 4x6 header and only have 4x4 and 2x4 material?

Ans.H-1a Nail 2x4 to top of 4x4 with 16d@3" o.c. This build-up is about 80% as strong as 4x6

Ans.H-1b Stack 2-4x4 and toenail together. This build-up is slightly stronger than 4x6

Ans.H-1c Place 2-2x6 side-by-side with ½" or ¾" plywood in between. Inter-nail with 16d@6″ o.c., stagger.

Question H-2 What to do if need 4x8 header and only have 4x4 and 2x4 material?

Ans.H-2 Stack 2-4x4 and place ½" or ¾" plywood each side. Nail 8d@3" o.c. each side to each 4x4. (stop ply short of posts)

Question H-3 How big of a Header is needed?

Ans.H-3a To support a damaged wood structure, use a 4x4 header as minimum and add 1" to depth for each additional foot of clear span larger than 4 ft. Example use 4x6 for 5 ft span and 4x8 for 8 ft spans. For 6x6 posts you may use a 6x6 header for 5ft o.c.

Ans.H-3b To support a damaged concrete structure, header size depends on the condition of the concrete structure.

- To support a minimally cracked concrete beam or slab, with 4x4 posts spaced at 4 ft o.c., use a 6x6 header with 6x6 post spaced 5ft o.c. Since the concrete structure is stiffer and stronger than most any wood header, the concrete will span between posts so the header functions mostly as an interconnection of the posts and diagonal bracing.
- To support badly cracked concrete slabs and beams, the header should be sized by the Structures Specialist (StS)

  If StS is not available, then use 4x8 header for 4x4x 8ft long posts (8000lb capacity) spaced up to 4 feet. Use 6x12 for 6x6x12ft long posts for spans up to 4ft. For 5ft spans the capacity would be reduced by 10%, and for 6ft spans the capacity would be reduced by 25%.

4-20

POSTS

Question P-1 If only 2x4, 2x6, 2x8 and 4x4 are available, how to create a 6x6 or 8x8 post?

Ans. P-1a To construct a 6x6 one may use the following:
Build-up 4-2x6 to form a 5½" x 6" net post. Inter-nail with 16d@5"o.c. staggered plus add ½″ carriage bolt 6" from each end and 3ft o.c. As alternate to the bolts add 6"x ¾" x 12" plywood gussets on 6" faces at same spacing

As a less desirable option, add 2x6 to side of 4x4, plus 2x4 +½″ plywood fill to adjacent side. Inter-nail with 16d@5"o.c.

Ans. P-1b To construct an 8x8 one may use the following:
Build-up 5-2x8 and inter-nail with 16d@5" o.c., plus add ½" carriage bolt 6" from each end and 3ft o.c. As alternate to the bolts add 6"x ¾" x 12" plywood gussets on 8″ faces at same spacing

or

Build-up 4-4x4 to from a 7"x7" net post. Place 8ft" long x ¾" plywood gussets on all 4 sides at mid-height, plus 16" long x ¾" ply, all 4 sides near each end. Nail each gusset to each 4x4 with 8d @ 3"o.c. stagger.

Question P-2 What to do if post spacing is not exactly as shown in FOG?

Ans. P-2 Most types of shores that we build have posts spaced at between 30" and 4ft o.c. and headers should be sized accordingly (as indicated in Ans. H1 through H3). The total capacity of the posts should always be more than the total load. Remember that the capacity of a 4x4x8ft high post is 8000lb and a 6x6x12ft high post is 20,000lb.

- If the post spacing is more than 5ft o.c. the header size should be increased, or the capacity should be decreased. Decrease capacity 10% for a 6" increase in post spacing , and 25% for a 1ft increase in spacing.

US&R SHORING OPERATIONS GUIDE
REPAIRS, FAQ, GLOSSARY, & ENGINEERING TABLES

POSTS

Question P-1 If only 2x4, 2x6, 2x8 and 4x4 are available, how to create a 6x6 or 8x8 post?

Ans. P-1a To construct a 6x6 one may use the following:
Build-up 4-2x6 to form a 5½" x 6" net post. Inter-nail with 16d@5"o.c. staggered plus add ½″ carriage bolt 6" from each end and 3ft o.c. As alternate to the bolts add 6"x ¾" x 12" plywood gussets on 6" faces at same spacing

As a less desirable option, add 2x6 to side of 4x4, plus 2x4 +½″ plywood fill to adjacent side. Inter-nail with 16d@5"o.c.

Ans. P-1b To construct an 8x8 one may use the following:
Build-up 5-2x8 and inter-nail with 16d@5" o.c., plus add ½" carriage bolt 6" from each end and 3ft o.c. As alternate to the bolts add 6"x ¾" x 12" plywood gussets on 8″ faces at same spacing

or

Build-up 4-4x4 to from a 7"x7" net post. Place 8ft" long x ¾" plywood gussets on all 4 sides at mid-height, plus 16" long x ¾" ply, all 4 sides near each end. Nail each gusset to each 4x4 with 8d @ 3"o.c. stagger.

4

Question P-2 What to do if post spacing is not exactly as shown in FOG?

Ans. P-2 Most types of shores that we build have posts spaced at between 30" and 4ft o.c. and headers should be sized accordingly (as indicated in Ans. H1 through H3). The total capacity of the posts should always be more than the total load. Remember that the capacity of a 4x4x8ft high post is 8000lb and a 6x6x12ft high post is 20,000lb.

- If the post spacing is more than 5ft o.c. the header size should be increased, or the capacity should be decreased. Decrease capacity 10% for a 6" increase in post spacing , and 25% for a 1ft increase in spacing.

4-21

LACED POSTS

Question LP-1 What is the correct configuration of the diagonals, and does it really matter?

Ans. LP-1 The following standard has been adopted:

The two sides of the Laced Post should be made the same (for simplicity) and the diagonals should be in a "K" configuration. When one looks through the finished Laced Post from the side, the diagonals should form an "X".

After the end horizontals are placed, the end diagonals should also be configured as a "K". When one looks through the Laced Post from the end, the diagonals should form an "X".

This configuration is the easiest to remember, but any other configuration may be used, as long as one does not have too many diagonals intersecting at same location on a single post.

In previous editions of the USACE StS FOG, it was stated that having the diagonals at one side of the Laced Post configured as a reverse K (and the other 3 as a K) was preferred. However, when this is done, there will be 4 diagonals and 2 horizontal braces intersecting at one location on one 4x4 post. This can cause splitting of the post.

It should be noted that many Laced Post Systems, (13ft high) were tested from April 2000 to present - All failures occurred at more than 3 times the design load. Also significant cupping of wedges was observable when the load reached 2 times the design load, giving ample warning of system failure. Various configurations of diagonals were used.

Question LP-2 If the Maximum Height to Width Ratio of Laced Post is 4 to 1, why can you build a system with 4x4 post at 4ft o.c. up to 17ft high ?

Ans. LP-2 The 4 to 1 max. is based on the out to out dimension, and for posts 4ft o.c., the 4x out to out is 17'-2" **USE 17 feet** (Please note that the maximum height tested is 13 feet).

US&R SHORING OPERATIONS GUIDE
REPAIRS, FAQ, GLOSSARY, & ENGINEERING TABLES

LACED POSTS

Question LP-1 What is the correct configuration of the diagonals, and does it really matter?

Ans. LP-1 The following standard has been adopted:

The two sides of the Laced Post should be made the same (for simplicity) and the diagonals should be in a "K" configuration. When one looks through the finished Laced Post from the side, the diagonals should form an "X".

After the end horizontals are placed, the end diagonals should also be configured as a "K". When one looks through the Laced Post from the end, the diagonals should form an "X".

This configuration is the easiest to remember, but any other configuration may be used, as long as one does not have too many diagonals intersecting at same location on a single post.

In previous editions of the USACE StS FOG, it was stated that having the diagonals at one side of the Laced Post configured as a reverse K (and the other 3 as a K) was preferred. However, when this is done, there will be 4 diagonals and 2 horizontal braces intersecting at one location on one 4x4 post. This can cause splitting of the post.

It should be noted that many Laced Post Systems, (13ft high) were tested from April 2000 to present - All failures occurred at more than 3 times the design load. Also significant cupping of wedges was observable when the load reached 2 times the design load, giving ample warning of system failure. Various configurations of diagonals were used.

Question LP-2 If the Maximum Height to Width Ratio of Laced Post is 4 to 1, why can you build a system with 4x4 post at 4ft o.c. up to 17ft high ?

Ans. LP-2 The 4 to 1 max. is based on the out to out dimension, and for posts 4ft o.c., the 4x out to out is 17'-2" USE 17 feet (Please note that the maximum height tested is 13 feet).

4-22

CRIBBING

Question CB-1 Maximum height to width ratio is specified as 3 to 1 in the Shoring Training (SCT, Mod 2) and 2 to 1 in Lifting and Moving Training (SCT Mod4), which is correct?

Ans.CB-1 Actually, both are correct. For normal shoring where Cribbing is constructed to support a damaged structure the 3 to 1 ratio may be used, assuming that the Crib is being loaded, more or less, uniformly.

- When Cribbing is being used in a ”Lift a little and Crib a little” application the 2 to 1 ratio is more appropriate due to the more dynamic nature of the potential loading.
- For both cases the height of cribbing should be minimized, since differences in the hardness of adjacent pieces of wood can cause differential deflection that can lead to instability. Therefore it is recommended that cribs using 4x4 lumber be limited to 4ft in height (6x6 limit to 6ft in height). If greater height in needed, these effects can be minimized by using a 3 member x 3 member layout.

WINDOW SHORES

Question W-1 Why do we need to provide wedges in both Horizontal and Vertical directions for these shores?

Ans.W-1 The need for the wedges in the Vertical direction is easily understood. The wedges that bear on the Sides of the openings at top and bottom are very important is situations where the Openings will tend to Rack or Bulge, such as Earthquakes, and the Window Shore should be strongly ″X″ braced in this case.

US&R SHORING OPERATIONS GUIDE
REPAIRS, FAQ, GLOSSARY, & ENGINEERING TABLES

CRIBBING

Question CB-1 Maximum height to width ratio is specified as 3 to 1 in the Shoring Training (SCT, Mod 2) and 2 to 1 in Lifting and Moving Training (SCT Mod4), which is correct?

Ans.CB-1 Actually, both are correct. For normal shoring where Cribbing is constructed to support a damaged structure the 3 to 1 ratio may be used, assuming that the Crib is being loaded, more or less, uniformly.

- When Cribbing is being used in a ”Lift a little and Crib a little” application the 2 to 1 ratio is more appropriate due to the more dynamic nature of the potential loading.
- For both cases the height of cribbing should be minimized, since differences in the hardness of adjacent pieces of wood can cause differential deflection that can lead to instability. Therefore it is recommended that cribs using 4x4 lumber be limited to 4ft in height (6x6 limit to 6ft in height). If greater height in needed, these effects can be minimized by using a 3 member x 3 member layout.

4

WINDOW SHORES

Question W-1 Why do we need to provide wedges in both Horizontal and Vertical directions for these shores?

Ans.W-1 The need for the wedges in the Vertical direction is easily understood. The wedges that bear on the Sides of the openings at top and bottom are very important is situations where the Openings will tend to Rack or Bulge, such as Earthquakes, and the Window Shore should be strongly ″X″ braced in this case.

4-23

NAILS

Question N-1 What embedment is required to develop the full value of a nail?

Ans.N-1 In general, nails should be embedded a little more than one half their length in the piece into which they are anchored. Example: 16d is 3.5” long and required full embedment is 1.94”.

Question N-2 What should we do when nailing a 2x to a 2x, since the embedment is only 1.5”?

Ans.N-2 The strength of these nails is 77% since the embedment ratio is 1.5/1.94. Since most 2x to 2x nailing involves lateral bracing connections, this is close enough.

Question N-3 Can we use 16d Cooler Nails (.148”x3.25”) instead of 16d common? (.162”.x3.5”)

Ans.N-3 Yes, since it is very important to minimize the splitting of wood in nailed joints, and 16d vinyl coated nails cause much less splitting and drive easier. These coated nails may be used in FEMA shoring without significant reduction in strength.

- 8d & 16d cooler nails have been used in Rakers as well as Laced Posts that have been tested during Structures Specialist Training. There was no significant difference in test results, from those tests using common nails.

US&R SHORING OPERATIONS GUIDE
REPAIRS, FAQ, GLOSSARY, & ENGINEERING TABLES

NAILS

Question N-1 What embedment is required to develop the full value of a nail?

Ans.N-1 In general, nails should be embedded a little more than one half their length in the piece into which they are anchored. Example: 16d is 3.5” long and required full embedment is 1.94”.

Question N-2 What should we do when nailing a 2x to a 2x, since the embedment is only 1.5”?

Ans.N-2 The strength of these nails is 77% since the embedment ratio is 1.5/1.94. Since most 2x to 2x nailing involves lateral bracing connections, this is close enough.

Question N-3 Can we use 16d Cooler Nails (.148”x3.25”) instead of 16d common? (.162”.x3.5”)

Ans.N-3 Yes, since it is very important to minimize the splitting of wood in nailed joints, and 16d vinyl coated nails cause much less splitting and drive easier. These coated nails may be used in FEMA shoring without significant reduction in strength.

- 8d & 16d cooler nails have been used in Rakers as well as Laced Posts that have been tested during Structures Specialist Training. There was no significant difference in test results, from those tests using common nails.

4-24

NAILS (continued)

Question N-4 What nailing should be used if Doug. Fir or Southern Pine lumber is unavailable?

Ans.N-4 As previously discussed, the nail strength value is approximately based on the density of wood, therefore reduce all nail values for the following:

- For Hem-Fir and Spruce-Pine-Fir reduce strength by 15% (Use 85% of full strength)
- For Eastern Softwoods, Western Cedar & Western Woods reduce strength by 25% (Use 75% of full strength)

This means that one should, accordingly, reduce the capacity of shoring, built using these species. However, for Raker Shores, since the strength is effectively based on the Cleat nailing or the Picket/Soil strength, one may add 3-nails to the 17-nail pattern when using species with either 15% or 25% strength reduction species.

Question N-5 What nailing should be used to connect rough cut 2x lumber, that is a full 2" thick?

Ans.N-5 In order to obtain adequate embedment, one should use 20d box nails instead of 16d. The 20 box nail has about 90% the strength of 16d common and same as the 16d cooler.

US&R SHORING OPERATIONS GUIDE
REPAIRS, FAQ, GLOSSARY, & ENGINEERING TABLES

NAILS (continued)

Question N-4 What nailing should be used if Doug. Fir or Southern Pine lumber is unavailable?

Ans.N-4 As previously discussed, the nail strength value is approximately based on the density of wood, therefore reduce all nail values for the following:

- For Hem-Fir and Spruce-Pine-Fir reduce strength by 15% (Use 85% of full strength)
- For Eastern Softwoods, Western Cedar & Western Woods reduce strength by 25% (Use 75% of full strength)

This means that one should, accordingly, reduce the capacity of shoring, built using these species. However, for Raker Shores, since the strength is effectively based on the Cleat nailing or the Picket/Soil strength, one may add 3-nails to the 17-nail pattern when using species with either 15% or 25% strength reduction species.

4

Question N-5 What nailing should be used to connect rough cut 2x lumber, that is a full 2" thick?

Ans.N-5 In order to obtain adequate embedment, one should use 20d box nails instead of 16d. The 20 box nail has about 90% the strength of 16d common and same as the 16d cooler.

4-25

RAKER SHORES

Question R-1 What is the most appropriate spacing for Raker Shores?

Ans.R-1 The spacing should be based on the height, weight and condition of the wall being supported. Each Solid Sole or Split Sole Raker is designed to support a 2500lbs horizontal force. A Structure Specialist should be asked to evaluate the situation, and specify the required spacing. In any case Raker Shores should not be spaced more than 8 feet.

Question R-2 How far should a Raker be spaced from the corner?

Ans. R-2a This depends on the condition of the wall. If the wall corner is badly cracked, it would be appropriate to place the first Raker as near the corner as possible. Also in many cases URM corners may have large diagonal cracks that appear to form a ”V” that tends to allow a large wedge of masonry to fall from the corner. In this case one may need to place one or more Rakers in each direction near the corner.

Ans. R-2b When wall corners have little damage, the first Raker may be spaced from 4ft to 8ft from the corner.

Question R-3 What is the best configuration of the Flying (or Friction) Raker?

Ans.R-3 The Flying Raker is intended to be a initial/spot shore, and is the weakest type of Raker, but are useful when debris are found at the base of the damaged wall. Since the Bottom Brace is configured as a horizontal, there is a tendency to bend the Raker and add to the horizontal force applied to the Trough Base. The Trough may need to be anchored using a Sole Anchor and more than 2 Pickets. Consult a Structures Spec. to evaluate the need for extra anchorage

US&R SHORING OPERATIONS GUIDE
REPAIRS, FAQ, GLOSSARY, & ENGINEERING TABLES

RAKER SHORES

Question R-1 What is the most appropriate spacing for Raker Shores?

Ans.R-1 The spacing should be based on the height, weight and condition of the wall being supported. Each Solid Sole or Split Sole Raker is designed to support a 2500lbs horizontal force. A Structure Specialist should be asked to evaluate the situation, and specify the required spacing. In any case Raker Shores should not be spaced more than 8 feet.

Question R-2 How far should a Raker be spaced from the corner?

Ans. R-2a This depends on the condition of the wall. If the wall corner is badly cracked, it would be appropriate to place the first Raker as near the corner as possible. Also in many cases URM corners may have large diagonal cracks that appear to form a ”V” that tends to allow a large wedge of masonry to fall from the corner. In this case one may need to place one or more Rakers in each direction near the corner.

Ans. R-2b When wall corners have little damage, the first Raker may be spaced from 4ft to 8ft from the corner.

Question R-3 What is the best configuration of the Flying (or Friction) Raker?

Ans.R-3 The Flying Raker is intended to be a initial/spot shore, and is the weakest type of Raker, but are useful when debris are found at the base of the damaged wall. Since the Bottom Brace is configured as a horizontal, there is a tendency to bend the Raker and add to the horizontal force applied to the Trough Base. The Trough may need to be anchored using a Sole Anchor and more than 2 Pickets. Consult a Structures Spec. to evaluate the need for extra anchorage

4-26

RAKER SHORES (continued)

Question R-4 When should one use a 30 degree Raker?

Ans. R-4 The 30 degree Raker is the most efficient Raker, since the flatter angle allows the horizontal resistance to be 86% of the Raker Force, and the Vertical lift is only 50% of the Raker Force. However, access, and height of insertion point may not allow the 30 degree configuration to be easily constructed.

- Also it takes a longer Raker to reach the same insertion point as for 45 & 60 degree Rakers.
- 30 degree Rakers should be considered when bracing a One-Sided Trench or Basement Excavation.

Question R-5 How should one connect the upper end of a 60 degree Raker, since we no longer recommend that the wall plate has been notched out 1 inch?

ANS. R-5 The 1” notch is no longer recommended for 60 degree Rakers. Use a 2x4x30" cleat with 20-16d nails for a 4x4 Raker System, and a 2x6x30" cleat with 29-16d nails for 6x6 Raker .

US&R SHORING OPERATIONS GUIDE
REPAIRS, FAQ, GLOSSARY, & ENGINEERING TABLES

RAKER SHORES (continued)

Question R-4 When should one use a 30 degree Raker?

Ans. R-4 The 30 degree Raker is the most efficient Raker, since the flatter angle allows the horizontal resistance to be 86% of the Raker Force, and the Vertical lift is only 50% of the Raker Force. However, access, and height of insertion point may not allow the 30 degree configuration to be easily constructed.

- Also it takes a longer Raker to reach the same insertion point as for 45 & 60 degree Rakers.
- 30 degree Rakers should be considered when bracing a One-Sided Trench or Basement Excavation.

Question R-5 How should one connect the upper end of a 60 degree Raker, since we no longer recommend that the wall plate has been notched out 1 inch?

4

ANS. R-5 The 1” notch is no longer recommended for 60 degree Rakers. Use a 2x4x30" cleat with 20-16d nails for a 4x4 Raker System, and a 2x6x30" cleat with 29-16d nails for 6x6 Raker .

4-27

DIAGONAL BRACING

Question DB-1 Under what conditions does one need to use Diagonals in a "X" configuration, and when is a single Diagonal acceptable (as in Laced Posts)?

Ans.DB-1 Based on the Maximum Length to Width Ratio of 50 (L/D=50 max.), if a 2x Diagonal Brace is more than 7'-6" long, one must use an "X" since it must be assumed that the 2x can only resist a tension force. If the Diagonal is 7'-6" or less in length, the 2x can resist tension or compression, and, therefore a single Diagonal may be used.

- Based on this information, it should be understood that the maximum spacing for Laced Posts is 4 ft for 4x4 & 5 ft for 6x6
  - If the Laced Post is more than 11 feet high, a configuration of three Diagonals per side is required.
  - If the Laced Post is more than 17 feet high, a configuration of four Diagonals per side is required.

Question DB-2 Is it necessary to nail one X-brace to the other at the crossing?

Ans. DB-2 Technically, no nailing is required, but it is a good idea, since it could make the bracing system stiffer by allowing each brace to partly restrain the other in the weak (1 1/2") direction. A minimum of 3 nails should be used, but when using 2x6, the 5-nail pattern is standard.

US&R SHORING OPERATIONS GUIDE
REPAIRS, FAQ, GLOSSARY, & ENGINEERING TABLES

DIAGONAL BRACING

Question DB-1 Under what conditions does one need to use Diagonals in a "X" configuration, and when is a single Diagonal acceptable (as in Laced Posts)?

Ans.DB-1 Based on the Maximum Length to Width Ratio of 50 (L/D=50 max.), if a 2x Diagonal Brace is more than 7'-6" long, one must use an "X" since it must be assumed that the 2x can only resist a tension force. If the Diagonal is 7'-6" or less in length, the 2x can resist tension or compression, and, therefore a single Diagonal may be used.

- Based on this information, it should be understood that the maximum spacing for Laced Posts is 4 ft for 4x4 & 5 ft for 6x6
  - If the Laced Post is more than 11 feet high, a configuration of three Diagonals per side is required.
  - If the Laced Post is more than 17 feet high, a configuration of four Diagonals per side is required.

Question DB-2 Is it necessary to nail one X-brace to the other at the crossing?

Ans. DB-2 Technically, no nailing is required, but it is a good idea, since it could make the bracing system stiffer by allowing each brace to partly restrain the other in the weak (1 1/2") direction. A minimum of 3 nails should be used, but when using 2x6, the 5-nail pattern is standard.

4-28

LUMBER GRADE

Question L-1 What adjustments are needed if Douglas Fir or Southern Yellow Pine timber is not available?
(Applies to Vertical and Laced Post shores, Cribbing, Sloped Floor and Raker shores)

Ans. L-1 Lumber strength and nail strength values , in general, are based on the density of the wood species. The following reduction in strength values should be used:

- For Hem-Fir and Spruce-Pine-Fir, reduce strength by 15%
- For Eastern Softwoods, Western Cedar & Western Woods, reduce strength by 25%

This means that the capacity of the shoring should be reduced proportionally or the post spacing should be reduced proportionally Example: for 15% reduction in post spacing, 4 ft would become 3′ - 6”. For 25% reduction, 4 ft would become 3 ft.

Question L-2 What is strength reduction if pressure treated lumber is used? (may be called CCA, Wolmanized, NatureWood, Natural Select, etc.)

Ans. L-2a Most all commercially treated sawn lumber that has been treated with a ”Preservative” to reduce its susceptibility to insects and decay, has been embedded with some sort of Copper-based preservative or with Creosote. Chromated Copper Arsenate (CCA) has been the most common for sawn lumber, but due to environmental concerns, other preservatives are being introduced.

Ans. L-2b No ”Significant” reduction in wood strength occurs due to treatment using Copper based or other preservative compounds. However, most pressure treated sawn lumber will be sold in a ”Dry” condition which makes it more susceptible to splitting caused by nailing. Also some treated wood may be split and or warped.
One should use a ”Common Sense” approach and avoid badly split or warped wood, especially for critical parts of shoring like Raker Cleats and the Diagonals in Laced Post Systems.

US&R SHORING OPERATIONS GUIDE
REPAIRS, FAQ, GLOSSARY, & ENGINEERING TABLES

LUMBER GRADE

Question L-1 What adjustments are needed if Douglas Fir or Southern Yellow Pine timber is not available?
(Applies to Vertical and Laced Post shores, Cribbing, Sloped Floor and Raker shores)

Ans. L-1 Lumber strength and nail strength values , in general, are based on the density of the wood species. The following reduction in strength values should be used:

- For Hem-Fir and Spruce-Pine-Fir, reduce strength by 15%
- For Eastern Softwoods, Western Cedar & Western Woods, reduce strength by 25%

This means that the capacity of the shoring should be reduced proportionally or the post spacing should be reduced proportionally Example: for 15% reduction in post spacing, 4 ft would become 3′ - 6”. For 25% reduction, 4 ft would become 3 ft.

Question L-2 What is strength reduction if pressure treated lumber is used? (may be called CCA, Wolmanized, NatureWood, Natural Select, etc.)

4

Ans. L-2a Most all commercially treated sawn lumber that has been treated with a ”Preservative” to reduce its susceptibility to insects and decay, has been embedded with some sort of Copper-based preservative or with Creosote. Chromated Copper Arsenate (CCA) has been the most common for sawn lumber, but due to environmental concerns, other preservatives are being introduced.

Ans. L-2b No ”Significant” reduction in wood strength occurs due to treatment using Copper based or other preservative compounds. However, most pressure treated sawn lumber will be sold in a ”Dry” condition which makes it more susceptible to splitting caused by nailing. Also some treated wood may be split and or warped.
One should use a ”Common Sense” approach and avoid badly split or warped wood, especially for critical parts of shoring like Raker Cleats and the Diagonals in Laced Post Systems.

4-29

MISCELLANEOUS QUESTIONS

Question M-1 Should we shore Steel Bar Joist from the bottom (Bottom Chord), or do we need to place the shoring system up under the top (Top Chord)?

ANS. M-1 One should not place a shoring system directly under the bottom of bar joist or any thin, tall truss (like timber trusses made from 2x). However, there may be cases where you don't have any other reasonable choice. In that case one needs to do the following:

- Check with your Structures Specialist (StS).
- Place shores directly under the intersection of the web members in more than one location for the same group of trusses. That is, spread out the load as much as possible so as not to overload any one of the truss diagonals.
- If some perpendicular to the truss, bracing is present, place the shores as near that location as practical, keeping the other considerations, listed above.
- It is best to have a StS give you advice on any particular situation.

Question M-2 Should we secure the sole of a sloped floor shore?

ANS. M-2 Absolutely, yes one should secure the sole. Most sloped floors would be somewhat unpredictable, and securing the sole could be very beneficial.

Question M-3 Should we place the wedges at the top or at the bottom of a Prefabricated Door or Window Shore, when there is the possibility that the bottom will become submerged?

ANS. M-3 There is no structural problem in placing the wedges at the bottom in this case, but how would one check and re-tighten, if under water. In this (or any) case, there is no problem in having the wedges at the top. In fact in all cases of Prefabricated Window/Door one could have wedges and/or shims at the top and/or bottom, especially if the header is sloped.

US&R SHORING OPERATIONS GUIDE
REPAIRS, FAQ, GLOSSARY, & ENGINEERING TABLES

MISCELLANEOUS QUESTIONS

Question M-1 Should we shore Steel Bar Joist from the bottom (Bottom Chord), or do we need to place the shoring system up under the top (Top Chord)?

ANS. M-1 One should not place a shoring system directly under the bottom of bar joist or any thin, tall truss (like timber trusses made from 2x). However, there may be cases where you don't have any other reasonable choice. In that case one needs to do the following:

- Check with your Structures Specialist (StS).
- Place shores directly under the intersection of the web members in more than one location for the same group of trusses. That is, spread out the load as much as possible so as not to overload any one of the truss diagonals.
- If some perpendicular to the truss, bracing is present, place the shores as near that location as practical, keeping the other considerations, listed above.
- It is best to have a StS give you advice on any particular situation.

Question M-2 Should we secure the sole of a sloped floor shore?

ANS. M-2 Absolutely, yes one should secure the sole. Most sloped floors would be somewhat unpredictable, and securing the sole could be very beneficial.

Question M-3 Should we place the wedges at the top or at the bottom of a Prefabricated Door or Window Shore, when there is the possibility that the bottom will become submerged?

ANS. M-3 There is no structural problem in placing the wedges at the bottom in this case, but how would one check and re-tighten, if under water. In this (or any) case, there is no problem in having the wedges at the top. In fact in all cases of Prefabricated Window/Door one could have wedges and/or shims at the top and/or bottom, especially if the header is sloped.

4-30

PREFERRED SHORE CONSTRUCTION SEQUENCE

Shoring during long-term incidents should be constructed with as much prefabrication as practical, and in a sequence that provides an increasingly safer rescue environment.

However, there will be many incidents that have a relatively short duration, and may only require spot shores and/or 2 and 3 post vertical shores. In these and other cases it also may not be practical to prefabricate the shoring.

The ”**Preferred Sequence**” that is suggested here, should be followed, only if it is practical, as in a damaged concrete structure that requires a prolonged shoring operation.

- Vertical Shoring should begin with the installation of spot shores, such as a Tee Shore, Double Tee Shore, Pneumatic Struts or a single post.
  - These may be called **Class 1 Shores** (one dimensional).
  - Class 1 shores are intended to quickly reduce risk, for a short period of time.
  - The Double Tee is actually more like a Class 2 Shore.
- If the Rescue Scenario is prolonged, then one should further reduce risk by installing 2-Post Vertical Shores (or single Sloped Floor Shores).
  - The 2-Post Vertical is just half of a Laced Post, and can be partly prefabricated, and quickly carried into place.
  - These may be **Class 2 Shores** (two dimensional).
  - Vertical Shores with 3 or more posts are difficult to prefabricate and to develop into a full 3-Dimensional Systems. However they may be very useful in providing continuous support under damaged beams or a series of broken wood, floor joist.

US&R SHORING OPERATIONS GUIDE
REPAIRS, FAQ, GLOSSARY, & ENGINEERING TABLES

PREFERRED SHORE CONSTRUCTION SEQUENCE

Shoring during long-term incidents should be constructed with as much prefabrication as practical, and in a sequence that provides an increasingly safer rescue environment.

However, there will be many incidents that have a relatively short duration, and may only require spot shores and/or 2 and 3 post vertical shores. In these and other cases it also may not be practical to prefabricate the shoring.

The ”**Preferred Sequence**” that is suggested here, should be followed, only if it is practical, as in a damaged concrete structure that requires a prolonged shoring operation.

- Vertical Shoring should begin with the installation of spot shores, such as a Tee Shore, Double Tee Shore, Pneumatic Struts or a single post.
  - These may be called **Class 1 Shores** (one dimensional).
  - Class 1 shores are intended to quickly reduce risk, for a short period of time.
  - The Double Tee is actually more like a Class 2 Shore.
- If the Rescue Scenario is prolonged, then one should further reduce risk by installing 2-Post Vertical Shores (or single Sloped Floor Shores).
  - The 2-Post Vertical is just half of a Laced Post, and can be partly prefabricated, and quickly carried into place.
  - These may be **Class 2 Shores** (two dimensional).
  - Vertical Shores with 3 or more posts are difficult to prefabricate and to develop into a full 3-Dimensional Systems. However they may be very useful in providing continuous support under damaged beams or a series of broken wood, floor joist.

4

4-31

PREFERRED SHORE CONSTRUCTION SEQUENCE (continued)

- The next step in the Shoring Sequence would be to convert the 2-Post Shores into Laced Post Shores (or complete the Sloped Floor Shores as Braced Pairs).
  - These are well braced 3-Dimensional Systems, and may be called Class 3 Shores.
  - **Class 3 Shores** are the most stable systems that we can build, and one may make them more stable by anchoring the Sole Plates to the concrete slab.
- Cribbing is a 3-dimensional system, but most cribs rely on, only, friction for lateral bracing.
  - If more positive lateral bracing is desired, cribs members may be interconnected using plywood strips as shown on page 2-45.
  - The base members could also be restrained from sliding on the concrete slab by using anchor bolts or assemblies similar to Rake Sole Anchors.
- Raker Shores should be installed using a similar progression.
  - First one Raker would be built and moved into place.
  - Then another could be paired with the first, with X bracing between them.
  - This could be followed by an entire series of Rakers that extend the full length of the damaged wall.
  - All Rakers should be prefabricated as much as possible.
- A Pneumatic Strut, Raker System or Systems may be used as the initial, temporary Raker System.
  - Preplan to make sure that the temporary Raker System is smaller than the Final Systems, so it may be built over, and removed after the final Raker System is completed.
  - Pneumatic Strut Systems are available that allow a pair of Rakers to be cross braced, also they can have a mid-point brace installed to improve the stability of the system.

US&R SHORING OPERATIONS GUIDE
REPAIRS, FAQ, GLOSSARY, & ENGINEERING TABLES

PREFERRED SHORE CONSTRUCTION SEQUENCE (continued)

- The next step in the Shoring Sequence would be to convert the 2-Post Shores into Laced Post Shores (or complete the Sloped Floor Shores as Braced Pairs).
  - These are well braced 3-Dimensional Systems, and may be called Class 3 Shores.
  - **Class 3 Shores** are the most stable systems that we can build, and one may make them more stable by anchoring the Sole Plates to the concrete slab.
- Cribbing is a 3-dimensional system, but most cribs rely on, only, friction for lateral bracing.
  - If more positive lateral bracing is desired, cribs members may be interconnected using plywood strips as shown on page 2-45.
  - The base members could also be restrained from sliding on the concrete slab by using anchor bolts or assemblies similar to Rake Sole Anchors.
- Raker Shores should be installed using a similar progression.
  - First one Raker would be built and moved into place.
  - Then another could be paired with the first, with X bracing between them.
  - This could be followed by an entire series of Rakers that extend the full length of the damaged wall.
  - All Rakers should be prefabricated as much as possible.
- A Pneumatic Strut, Raker System or Systems may be used as the initial, temporary Raker System.
  - Preplan to make sure that the temporary Raker System is smaller than the Final Systems, so it may be built over, and removed after the final Raker System is completed.
  - Pneumatic Strut Systems are available that allow a pair of Rakers to be cross braced, also they can have a mid-point brace installed to improve the stability of the system.

4-32

GLOSSARY OF TERMS

Arch- A curved structure used as a support over an open space. It produces an outward thrust as well as downward forces at its supported ends.

Axial load- A tension or compression load which passes through the center of a structural member (like a column, beam, truss member, diagonal brace or hanger rod).

Bay- The space between beams/trusses or between rows of columns considered in transverse planes.

Beam- A horizontal structural member, subject to compression, tension, and shear, usually found in any one of three different configurations: cantilever, continuous, and simple.

Bearing Wall- An interior or exterior wall that supports a load in addition to its own weight.

Brick Veneer- A single thickness of brick wall facing placed over frame construction or structural masonry.

Buttress- A wall reinforcement or brace built on the outside of a structure, sometimes called a ”wall column.” When separated from the wall and connected by an arch at the top, it is called a flying buttress.

Cantilever Beam- A beam that has two or more supports but extends beyond one end support and ends in clear space (similar to a diving board).

Cavity Wall- A wall of two parallels wythes (vertical wall of bricks, one masonry unit thick) separated by an air space. Wythes are connected by metal ties.

Chair- A device of bent wire used to hold reinforcing bars in position.

US&R SHORING OPERATIONS GUIDE
REPAIRS, FAQ, GLOSSARY, & ENGINEERING TABLES

GLOSSARY OF TERMS

Arch- A curved structure used as a support over an open space. It produces an outward thrust as well as downward forces at its supported ends.

Axial load- A tension or compression load which passes through the center of a structural member (like a column, beam, truss member, diagonal brace or hanger rod).

Bay- The space between beams/trusses or between rows of columns considered in transverse planes.

Beam- A horizontal structural member, subject to compression, tension, and shear, usually found in any one of three different configurations: cantilever, continuous, and simple.

Bearing Wall- An interior or exterior wall that supports a load in addition to its own weight.

Brick Veneer- A single thickness of brick wall facing placed over frame construction or structural masonry.

Buttress- A wall reinforcement or brace built on the outside of a structure, sometimes called a ”wall column.” When separated from the wall and connected by an arch at the top, it is called a flying buttress.

Cantilever Beam- A beam that has two or more supports but extends beyond one end support and ends in clear space (similar to a diving board).

Cavity Wall- A wall of two parallels wythes (vertical wall of bricks, one masonry unit thick) separated by an air space. Wythes are connected by metal ties.

Chair- A device of bent wire used to hold reinforcing bars in position.

4-33

4

Check- A lengthwise separation of wood fibers, usually extending across the annular rings. Check commonly result from stresses that develop in wood during the seasoning process.

Choker Hitch- A sling where one end passes through the eye of the opposite end (or through the inside of the opposite loop of an endless sling) and is pulled tight around the object that is to be lifted (like a Larks Foot).

Chord- Main members of trusses as distinguished from diagonals.

Collapse – Definition: The failure of any portion of a structure.

Cantilever Collapse- When many levels of floor collapse, some extend out from the remainder, like a diving board.

Curtain Fall Wall Collapse- One type of masonry wall collapse. it occurs when an exterior masonry wall drops like a falling curtain cut loose at the top. For most URM buildings there is some sort of **Wall Fall Collapse,** usually starting at the top.

Lean-to-Floor Collapse- A floor collapse in which one end of the floor remains partially supported by a wall or beam and the other end of the floor collapses to the floor below. A **V-shape** Collapse is similar, except two sections of floor collapse due to collapse of wall that supports them both.

Lift and Drop Collapse – Occurs in buildings built with concrete floors, that have sustained a blast near street level.

Ninety Degree Wall Collapse- The wall falls straight out as a monolithic piece at a 90 degree angle, similar to a falling tree. This is typical for buildings with **Tilt-Up Walls**

Offset Collapse- Typical wood frame building collapse when the structure starts to Rack (form a parallelogram), and eventually collapses so that the structure is offset by the story height of however many stories are involved.

Overturn Collapse – Can occur in steel or concrete buildings where there is a weakness in a lower story and the entire building tips over.

Pancake Floor Collapse- Collapse of one or more floors upon the floors or ground below into a pancake configuration.

US&R SHORING OPERATIONS GUIDE
REPAIRS, FAQ, GLOSSARY, & ENGINEERING TABLES

Check- A lengthwise separation of wood fibers, usually extending across the annular rings. Check commonly result from stresses that develop in wood during the seasoning process.

Choker Hitch- A sling where one end passes through the eye of the opposite end (or through the inside of the opposite loop of an endless sling) and is pulled tight around the object that is to be lifted (like a Larks Foot).

Chord- Main members of trusses as distinguished from diagonals.

Collapse – Definition: The failure of any portion of a structure.

Cantilever Collapse- When many levels of floor collapse, some extend out from the remainder, like a diving board.

Curtain Fall Wall Collapse- One type of masonry wall collapse. it occurs when an exterior masonry wall drops like a falling curtain cut loose at the top. For most URM buildings there is some sort of **Wall Fall Collapse,** usually starting at the top.

Lean-to-Floor Collapse- A floor collapse in which one end of the floor remains partially supported by a wall or beam and the other end of the floor collapses to the floor below. A **V-shape** Collapse is similar, except two sections of floor collapse due to collapse of wall that supports them both.

Lift and Drop Collapse – Occurs in buildings built with concrete floors, that have sustained a blast near street level.

Ninety Degree Wall Collapse- The wall falls straight out as a monolithic piece at a 90 degree angle, similar to a falling tree. This is typical for buildings with **Tilt-Up Walls**

Offset Collapse- Typical wood frame building collapse when the structure starts to Rack (form a parallelogram), and eventually collapses so that the structure is offset by the story height of however many stories are involved.

Overturn Collapse – Can occur in steel or concrete buildings where there is a weakness in a lower story and the entire building tips over.

Pancake Floor Collapse- Collapse of one or more floors upon the floors or ground below into a pancake configuration.

4-34

Collapse – continued

Soft 1st Story Collapse – Occurs when only the first story of a building collapses (usually due to earthquake) due to the weakness and/or reduced stiffness of the 1st story when compared to the remainder of the building.

Collapse Zone – usually defined as the area that will be occupied on the ground when a structure completely collapses.

Column- Vertical structural member subject to compressive forces.

Compression- Force that tends to push the mass of a material together.

Concentrated Load- A load applied at one point or within a limited area of a structure.

Concrete –

Definition- A material used in construction that is extremely versatile and relatively noncombustible. Extremely effective in compression, but weak in tension and requires the use of reinforcing steel, either rebar or high strength cable.

Post-tension- Tension is applied to the reinforcing steel cable after the concrete is hardened and anchored only at the ends of the structure.

Poured in place- Concrete that is poured into the location where it is going to exist.

Precast- Concrete that is cast, allowed to harden, and then erected as part of a structure.

Pretension- Tension is applied to the reinforcing steel cable in a factory, prior to pouring the concrete. The concrete is then poured and bonds to the reinforcing.

Confined Space- Any space that lacks ventilation; usually the space is larger in area than the point of entry.

Continuous Beam- beam supported at both ends and at one or more interior supports.

Cornice- A horizontal projection which crowns or finishes the eaves of a building.

US&R SHORING OPERATIONS GUIDE
REPAIRS, FAQ, GLOSSARY, & ENGINEERING TABLES

Collapse – continued

Soft 1st Story Collapse – Occurs when only the first story of a building collapses (usually due to earthquake) due to the weakness and/or reduced stiffness of the 1st story when compared to the remainder of the building.

Collapse Zone – usually defined as the area that will be occupied on the ground when a structure completely collapses.

Column- Vertical structural member subject to compressive forces.

Compression- Force that tends to push the mass of a material together.

Concentrated Load- A load applied at one point or within a limited area of a structure.

Concrete –

Definition- A material used in construction that is extremely versatile and relatively noncombustible. Extremely effective in compression, but weak in tension and requires the use of reinforcing steel, either rebar or high strength cable.

Post-tension- Tension is applied to the reinforcing steel cable after the concrete is hardened and anchored only at the ends of the structure.

Poured in place- Concrete that is poured into the location where it is going to exist.

Precast- Concrete that is cast, allowed to harden, and then erected as part of a structure.

Pretension- Tension is applied to the reinforcing steel cable in a factory, prior to pouring the concrete. The concrete is then poured and bonds to the reinforcing.

Confined Space- Any space that lacks ventilation; usually the space is larger in area than the point of entry.

Continuous Beam- beam supported at both ends and at one or more interior supports.

Cornice- A horizontal projection which crowns or finishes the eaves of a building.

4-35

4

Cribbing- Short pieces of lumber used to support an object.

Curtain Wall- An exterior wall supported by the structural frame of the building. Also called an infill wall. Usually has no structural value, but may carry some load after a collapse.

Dead Load- One of the five major loads that must be considered in the design of a building (live, wind, impact, and seismic loads are the others). A Dead Load is a static or fixed load created by the structure itself and all permanent elements within.

Deck- A horizontal surface supported by floor or roof beams.

Deflection- The movement of a structural element under a load.

Drywall- A system of interior wall finish using sheets of gypsum board and taped joints.

Efflorescence- Crystals of salt appearing as a white powder on concrete and masonry surfaces, usually indicating the presence of moisture.

Enclosure Wall- Interior wall that separates a vertical opening for a stairway, elevator, duct space, etc. that connects two or more floors.

Expansion Joint- A flexible joint in concrete used to prevent cracking or breaking because of expansion and contraction due to temperature changes.

Exterior Wall- A wall that forms a boundary to a building and is usually exposed to the weather.

Facade- The front or face of a building.

Fascia- A flat vertical board located at the outer face of a cornice.

Fire Cut Beam- A gravity support beam end designed to release itself from the masonry wall during collapse.

Fire Wall- A wall of sufficient durability and stability to withstand the effects of the most severe anticipated fire exposure. Openings in the wall, if allowed, must be protected.

Flashing- Sheet metal used in roof and wall construction to keep water out.

US&R SHORING OPERATIONS GUIDE
REPAIRS, FAQ, GLOSSARY, & ENGINEERING TABLES

Cribbing- Short pieces of lumber used to support an object.

Curtain Wall- An exterior wall supported by the structural frame of the building. Also called an infill wall. Usually has no structural value, but may carry some load after a collapse.

Dead Load- One of the five major loads that must be considered in the design of a building (live, wind, impact, and seismic loads are the others). A Dead Load is a static or fixed load created by the structure itself and all permanent elements within.

Deck- A horizontal surface supported by floor or roof beams.

Deflection- The movement of a structural element under a load.

Drywall- A system of interior wall finish using sheets of gypsum board and taped joints.

Efflorescence- Crystals of salt appearing as a white powder on concrete and masonry surfaces, usually indicating the presence of moisture.

Enclosure Wall- Interior wall that separates a vertical opening for a stairway, elevator, duct space, etc. that connects two or more floors.

Expansion Joint- A flexible joint in concrete used to prevent cracking or breaking because of expansion and contraction due to temperature changes.

Exterior Wall- A wall that forms a boundary to a building and is usually exposed to the weather.

Facade- The front or face of a building.

Fascia- A flat vertical board located at the outer face of a cornice.

Fire Cut Beam- A gravity support beam end designed to release itself from the masonry wall during collapse.

Fire Wall- A wall of sufficient durability and stability to withstand the effects of the most severe anticipated fire exposure. Openings in the wall, if allowed, must be protected.

Flashing- Sheet metal used in roof and wall construction to keep water out.

4-36

Footing- The part of a building which rests on the bearing soil and is wider than the foundation wall. Also the base for a column.

Furring- Wood strips fastened to a wall, floor, or ceiling for the purpose of attaching covering material.

Girder- A structural element that supports a floor or roof beam.

Gusset Plate- A metal fastener in the form of a flat plate used to connect structural members. (also the plywood gusset plate connections used for US&R shoring)

Header Beam- A support used to reinforce an opening in the floor of a wood frame, ordinary, or heavy timber building.

Hollow Wall- A wall of two parallel wythes which are separated by an air space between them, but lack ties to hold the wythes together.

Hydraulic Shoring- Trench shores or jacks with movable parts that are operated by the action of hydraulic fluid.

Impact Load- A sudden load applied to a structure suddenly, such as a shock wave or a vibrating load.

Joist- A piece of lumber used as a floor or roof beam.

Kiln-Dried Lumber- Lumber that is artificially dried in an oven-like structure.

Kip- One thousand pounds.

Knot- A hard, irregular lump formed at the point where a branch grew out of a tree.

Nonbearing Wall- A wall that supports only its own weight.

Open Web Joist- A lightweight steel truss used as a floor or roof beam. It is made from a steel bar, bent at 90 degree angles, and welded between angle irons at the top and bottom bar bends.

Operating Radius- The horizontal distance from the centerline of rotation (the center pin of the cab) to a vertical line through the center of the sheave at the end of the boom.

US&R SHORING OPERATIONS GUIDE
REPAIRS, FAQ, GLOSSARY, & ENGINEERING TABLES

Footing- The part of a building which rests on the bearing soil and is wider than the foundation wall. Also the base for a column.

Furring- Wood strips fastened to a wall, floor, or ceiling for the purpose of attaching covering material.

Girder- A structural element that supports a floor or roof beam.

Gusset Plate- A metal fastener in the form of a flat plate used to connect structural members. (also the plywood gusset plate connections used for US&R shoring)

Header Beam- A support used to reinforce an opening in the floor of a wood frame, ordinary, or heavy timber building.

Hollow Wall- A wall of two parallel wythes which are separated by an air space between them, but lack ties to hold the wythes together.

Hydraulic Shoring- Trench shores or jacks with movable parts that are operated by the action of hydraulic fluid.

Impact Load- A sudden load applied to a structure suddenly, such as a shock wave or a vibrating load.

4

Joist- A piece of lumber used as a floor or roof beam.

Kiln-Dried Lumber- Lumber that is artificially dried in an oven-like structure.

Kip- One thousand pounds.

Knot- A hard, irregular lump formed at the point where a branch grew out of a tree.

Nonbearing Wall- A wall that supports only its own weight.

Open Web Joist- A lightweight steel truss used as a floor or roof beam. It is made from a steel bar, bent at 90 degree angles, and welded between angle irons at the top and bottom bar bends.

Operating Radius- The horizontal distance from the centerline of rotation (the center pin of the cab) to a vertical line through the center of the sheave at the end of the boom.

4-37

Parapet Wall- A portion of an exterior, fire, or party wall that extends above the roof line.

Partition- An interior wall, not more than one story in height, that separates two areas in the same building but is not intended to serve as a fire barrier (similar to curtain wall).

Party Wall- A wall that lies on a common lot line for two buildings and is common to both buildings. Most of these walls may be constructed in a wide range of materials or assemblies.

Pier- A supporting section of wall between two openings. Also a short masonry column. Also a deep concrete foundation.

Pilaster- A masonry or concrete column bonded to and built as an integral part of the inside of a masonry wall.

Plate- The top or bottom horizontal structural member of a wood frame wall or partition.

Platform Construction- Most common method of wood frame residential building construction (older structures may be balloon framed). A wood wall for this type of construction has a single 2x as sole at bottom and a double 2x plate at the top, with 2x studs sitting on the sole and having the double plates on top.

Floor joists bear on the top plates, and they are sheathed with plywood. (or solid 1x sheathing).

The next story is framed with a second wall, with joist and sheathing on top, and so on. This type of construction may be three or four stories high.

Pneumatic Shoring- Trench shores or jacks with movable parts that are operated by the action of a compressed gas.

Purlin- A horizontal member between trusses or large beams which supports the roof. These are usually 4x or 6x members.

US&R SHORING OPERATIONS GUIDE
REPAIRS, FAQ, GLOSSARY, & ENGINEERING TABLES

Parapet Wall- A portion of an exterior, fire, or party wall that extends above the roof line.

Partition- An interior wall, not more than one story in height, that separates two areas in the same building but is not intended to serve as a fire barrier (similar to curtain wall).

Party Wall- A wall that lies on a common lot line for two buildings and is common to both buildings. Most of these walls may be constructed in a wide range of materials or assemblies.

Pier- A supporting section of wall between two openings. Also a short masonry column. Also a deep concrete foundation.

Pilaster- A masonry or concrete column bonded to and built as an integral part of the inside of a masonry wall.

Plate- The top or bottom horizontal structural member of a wood frame wall or partition.

Platform Construction- Most common method of wood frame residential building construction (older structures may be balloon framed). A wood wall for this type of construction has a single 2x as sole at bottom and a double 2x plate at the top, with 2x studs sitting on the sole and having the double plates on top.

Floor joists bear on the top plates, and they are sheathed with plywood. (or solid 1x sheathing).

The next story is framed with a second wall, with joist and sheathing on top, and so on. This type of construction may be three or four stories high.

Pneumatic Shoring- Trench shores or jacks with movable parts that are operated by the action of a compressed gas.

Purlin- A horizontal member between trusses or large beams which supports the roof. These are usually 4x or 6x members.

4-38

Rafter- A 2x or 3x member, usually spaced at 16” or 24” that supports a sloped roof, and may form a simple truss.

Restrained beam- A beam who's ends are so securely welded or bolted so that they cannot rotate.

Ridgepole- (Ridge Beam) A horizontal timber that frames the highest point of a peak roof. Roof rafters fastened to the ridgepole.

Sandwich Wall- A nonbearing wall whose outer faces enclose an insulating core material. (some may be used as bearing walls)

Scab- A short piece of lumber generally cut from 2” x 4” stock, that is nailed to an upright to prevent the shifting of a shore.

Screw Jack- A trench shore or jack with threaded parts. The threading allows the jack to be lengthened or shortened.

Secondary Collapse- A collapse which follows the initial collapse. Can be caused by application of additional loads (aftershocks, wind snow, etc. rescue equipment, rescuers, etc.), settling of collapsed structures, drying of the soil,. Secondary Collapse can occur if significant Potential Energy is still present in the structure. Potential Energy may be characterized as heavy structure and objects that remain elevated and may move downward under force of Gravity.

Sheathing- The covering applied to the floor/roof or wall framing of a building to which siding is applied.

Sheeting- Generally speaking, wood planks and wood panels that support trench walls when held in place by shoring.

Shoring- The general term used for lengths of timber, screw jacks, hydraulic and pneumatic jacks and other devices that can be used to hold sheeting against trench walls. Individual supports are called shores, cross-braces, or struts.

Simply Supported Beam- A beam supported at both ends.

US&R SHORING OPERATIONS GUIDE
REPAIRS, FAQ, GLOSSARY, & ENGINEERING TABLES

Rafter- A 2x or 3x member, usually spaced at 16” or 24” that supports a sloped roof, and may form a simple truss.

Restrained beam- A beam who's ends are so securely welded or bolted so that they cannot rotate.

Ridgepole- (Ridge Beam) A horizontal timber that frames the highest point of a peak roof. Roof rafters fastened to the ridgepole.

Sandwich Wall- A nonbearing wall whose outer faces enclose an insulating core material. (some may be used as bearing walls)

Scab- A short piece of lumber generally cut from 2” x 4” stock, that is nailed to an upright to prevent the shifting of a shore.

Screw Jack- A trench shore or jack with threaded parts. The threading allows the jack to be lengthened or shortened.

Secondary Collapse- A collapse which follows the initial collapse. Can be caused by application of additional loads (aftershocks, wind snow, etc. rescue equipment, rescuers, etc.), settling of collapsed structures, drying of the soil,. Secondary Collapse can occur if significant Potential Energy is still present in the structure. Potential Energy may be characterized as heavy structure and objects that remain elevated and may move downward under force of Gravity.

4

Sheathing- The covering applied to the floor/roof or wall framing of a building to which siding is applied.

Sheeting- Generally speaking, wood planks and wood panels that support trench walls when held in place by shoring.

Shoring- The general term used for lengths of timber, screw jacks, hydraulic and pneumatic jacks and other devices that can be used to hold sheeting against trench walls. Individual supports are called shores, cross-braces, or struts.

Simply Supported Beam- A beam supported at both ends.

4-39

Slope of Grain- In lumber, the angle formed between the direction of wood fibers and the long axis of the member; usually expressed as a ratio of rise-to-run, for example, 1:12.

Snatch Block- A wood or steel shell single pulley block that can be opened on one side to accept a rope or cable.

Spalling- The expansion of excess moisture trapped within the cement of the concrete which in results in tensile forces within the concrete, causing it to break apart. Common occurrence when the concrete is exposed to fire.

Spandrel- That part of a wall between the head of a window and the sill of the window above.

Static Load- A load that remains constant.

Stress –

> **Definition-** A force per unit area exerted upon a structural member that strains or deforms its shape.
>
> **Compression-** A stress pressing or squeezing a structure together.
>
> **Shear -** A stress causing a structure to collapse when contacting parts or layers of the structure slide past one another. (Shearwall, Beam Shear, Slab Punching Shear)
>
> **Tension-** Stress placed on a structural member by the pull of forces causing extension.

Stud- Vertical structural uprights (2x4, 2x6 spaced 16” to 24”) which make up the walls and partitions in a frame building.

Suspended Ceiling- A ceiling built several inches or feet below the supporting roof or floor beams above, sometimes called a ”hanging” or ”dropped” ceiling. The concealed space is sometimes called a ”cockloft” or ”plenum” if it is used for HVAC.

US&R SHORING OPERATIONS GUIDE
REPAIRS, FAQ, GLOSSARY, & ENGINEERING TABLES

Slope of Grain- In lumber, the angle formed between the direction of wood fibers and the long axis of the member; usually expressed as a ratio of rise-to-run, for example, 1:12.

Snatch Block- A wood or steel shell single pulley block that can be opened on one side to accept a rope or cable.

Spalling- The expansion of excess moisture trapped within the cement of the concrete which in results in tensile forces within the concrete, causing it to break apart. Common occurrence when the concrete is exposed to fire.

Spandrel- That part of a wall between the head of a window and the sill of the window above.

Static Load- A load that remains constant.

Stress –

> **Definition-** A force per unit area exerted upon a structural member that strains or deforms its shape.
>
> **Compression-** A stress pressing or squeezing a structure together.
>
> **Shear -** A stress causing a structure to collapse when contacting parts or layers of the structure slide past one another. (Shearwall, Beam Shear, Slab Punching Shear)
>
> **Tension-** Stress placed on a structural member by the pull of forces causing extension.

Stud- Vertical structural uprights (2x4, 2x6 spaced 16” to 24”) which make up the walls and partitions in a frame building.

Suspended Ceiling- A ceiling built several inches or feet below the supporting roof or floor beams above, sometimes called a ”hanging” or ”dropped” ceiling. The concealed space is sometimes called a ”cockloft” or ”plenum” if it is used for HVAC.

4-40

Tensile Strength- The rated strength of a structural element or rope when it is loaded in tension. (Also Breaking Strength)

Torsional Load- A load that creates a twisting stress on a structural member. **Example**: when a pipe wrench is used to tighten or loosen the pipe or end fitting, it exerts a Torsional Load on the pipe.

Truss- A braced arrangement of steel or wood frame work made with triangular connecting members.

Vertical (or Wall) Collapse Zone- The expected ground area that a falling wall will cover when it collapse. For safety, it is normally estimated as 1.25 to 1.5 times the height

Wane- An edge or corner defect in lumber characterized by the presence of bark or the lack of wood.

Web- The wide vertical part of a steel beam between the flanges.

(Steel beams that are called **I** or **W Beams** have a thicker steel **Flange** at top and bottom with a thinner **Web** that is the vertical member between the **Flanges**.)

Web member- Secondary members of a steel ot wood truss contained between chords, usually configured diagonally.

Wind load- Horizontal and vertical pressure imposed on a structure by the wind. The Wind Pressure is proportional to the Speed Squared (for twice the speed there is four times the pressure)

Wood frame- Type of construction using small wood, horizontal and vertical members, usually spaced at 16 to 24 inches, that is then covered by some sort of sheathing.

Wythe- A single vertical stack of bricks that are most often found in a multi-brick wall.

US&R SHORING OPERATIONS GUIDE
REPAIRS, FAQ, GLOSSARY, & ENGINEERING TABLES

Tensile Strength- The rated strength of a structural element or rope when it is loaded in tension. (Also Breaking Strength)

Torsional Load- A load that creates a twisting stress on a structural member. **Example**: when a pipe wrench is used to tighten or loosen the pipe or end fitting, it exerts a Torsional Load on the pipe.

Truss- A braced arrangement of steel or wood frame work made with triangular connecting members.

Vertical (or Wall) Collapse Zone- The expected ground area that a falling wall will cover when it collapse. For safety, it is normally estimated as 1.25 to 1.5 times the height

Wane- An edge or corner defect in lumber characterized by the presence of bark or the lack of wood.

Web- The wide vertical part of a steel beam between the flanges.

4

(Steel beams that are called **I** or **W Beams** have a thicker steel **Flange** at top and bottom with a thinner **Web** that is the vertical member between the **Flanges**.)

Web member- Secondary members of a steel ot wood truss contained between chords, usually configured diagonally.

Wind load- Horizontal and vertical pressure imposed on a structure by the wind. The Wind Pressure is proportional to the Speed Squared (for twice the speed there is four times the pressure)

Wood frame- Type of construction using small wood, horizontal and vertical members, usually spaced at 16 to 24 inches, that is then covered by some sort of sheathing.

Wythe- A single vertical stack of bricks that are most often found in a multi-brick wall.

4-41

INTRO TO USEFUL TABLES – CRANE & RIGGING

Following this page there are tables that provide information that needs to be considered when ordering a Crane, information on the following:

Crane Stability Safety Factors	page 4-43
Wire Rope Slings	4-45
Wire Rope Inspection	4-47
Terminations	4-49
Synthetic Slings	4-51
Hoist Rings & Eye Nuts	4-52
Wedge Anchors	4-53
Concrete Screws	4-54
Pneumatic Strut Design Strength Tables	4-55
Crane Hand Signals	4-60

This Information has been reproduced from various sources, including:

The Crosby Group Inc, P.O. Box 3128 Tulsa, OK
1-800-777-1555
www.thecrosbygroup.com

The very useful Crosby User's Pocket Guide is highly recommended as a reference to be used during all Urban Search & Rescue Activities. It may be obtained directly from The Crosby Group.

US&R SHORING OPERATIONS GUIDE
REPAIRS, FAQ, GLOSSARY, & ENGINEERING TABLES

INTRO TO USEFUL TABLES – CRANE & RIGGING

Following this page there are tables that provide information that needs to be considered when ordering a Crane, information on the following:

Crane Stability Safety Factors page 4-43
Wire Rope Slings 4-45
Wire Rope Inspection 4-47
Terminations 4-49
Synthetic Slings 4-51
Hoist Rings & Eye Nuts 4-52
Wedge Anchors 4-53
Concrete Screws 4-54
Pneumatic Strut Design Strength Tables 4-55
Crane Hand Signals 4-60

This Information has been reproduced from various sources, including:

The Crosby Group Inc, P.O. Box 3128 Tulsa, OK
1-800-777-1555
www.thecrosbygroup.com

The very useful Crosby User's Pocket Guide is highly recommended as a reference to be used during all Urban Search & Rescue Activities. It may be obtained directly from The Crosby Group.

4-42

WORKING LOAD LIMIT or DESIGN LOAD

Given in terms of Diameter ^{2}

ITEM	Working Load in Tons
Wire Rope (S.F.=5)	D^2 x 9 Tons
Wire Rope Slings	D^2 x 8.5 Tons
Shackles (Alloy)	D^2 x 12.5 Ton
Shackles (carbon)	D^2 x 8.5 Tons
Chain Slings (I. D. as Type A)	D^2 x 24 Tons
Turnbuckles	D^2 x 5 Tons

(Improved Plow, IWRC Wire Rope)

CRANE STABILITY

Percent of Tipping & Safety Factor (for leveled crane)

Crane Type	% of Tipping	S.F.
Locomotive	85%	1.18
Crawlers	75	1.33
Mobile (on O. Riggers)	85	1.18
Mobile (on Tires)	75	1.33
Boom Truck	85	1.18

US&R SHORING OPERATIONS GUIDE
REPAIRS, FAQ, GLOSSARY, & ENGINEERING TABLES

WORKING LOAD LIMIT or DESIGN LOAD

Given in terms of Diameter ^{2}

ITEM	Working Load in Tons
Wire Rope (S.F.=5)	D^2 x 9 Tons
Wire Rope Slings	D^2 x 8.5 Tons
Shackles (Alloy)	D^2 x 12.5 Ton
Shackles (carbon)	D^2 x 8.5 Tons
Chain Slings (I. D. as Type A)	D^2 x 24 Tons
Turnbuckles	D^2 x 5 Tons

(Improved Plow, IWRC Wire Rope)

4

CRANE STABILITY

Percent of Tipping & Safety Factor (for leveled crane)

Crane Type	% of Tipping	S.F.
Locomotive	85%	1.18
Crawlers	75	1.33
Mobile (on O. Riggers)	85	1.18
Mobile (on Tires)	75	1.33
Boom Truck	85	1.18

4-43

GENERAL SLING INFORMATION

Center of Gravity

The center of gravity of an object is that point at which the entire weight may be considered as concentrated. In order to make a level lift, the crane hook must be directly above this point. While slight variations are usually permissible, if the crane hook is too far to one side of the center of gravity, dangerous tilting and/or swinging will result and should be corrected at once. For this reason, when the center of gravity is closer to one point of the sling attachment than to the other, the slings must be of unequal length. The sling stresses and sling angle will also be unequal.

Working Load Limit or Design Load

The working load limit, or design load is the useful working capacity of a sling. This varies, depending upon the type of hitch. The working load limit table indicates, by illustration the applications for which the various loads apply, when the slings are new. All ratings are in tons or 2,000 pounds.

Safety Factor

In general, a safety factor of approximately five is maintained throughout these tables. However, certain sling fittings, such as hooks, which will straighten without breaking, or links, which will deform beyond usefulness before breaking, cannot be assigned a definite numerical safety factor. In such cases, suitable safe loads are listed, based upon wide experience and sound engineering practice.

Sling Care

Proper care and usage are essential for maximum service and safety. Wire rope slings should be protected from sharp bends and cutting edges by means of corner saddles, burlap padding, or wood blocking. Heavy or continuous over-loading should be avoided as well as sudden jerks, which can build up a momentary over-load sufficient to break the sling. Wire rope slings should be stored where they are protected from moisture, and properly coiled when not in use.

US&R SHORING OPERATIONS GUIDE
REPAIRS, FAQ, GLOSSARY, & ENGINEERING TABLES

GENERAL SLING INFORMATION

Center of Gravity

The center of gravity of an object is that point at which the entire weight may be considered as concentrated. In order to make a level lift, the crane hook must be directly above this point. While slight variations are usually permissible, if the crane hook is too far to one side of the center of gravity, dangerous tilting and/or swinging will result and should be corrected at once. For this reason, when the center of gravity is closer to one point of the sling attachment than to the other, the slings must be of unequal length. The sling stresses and sling angle will also be unequal.

Working Load Limit or Design Load

The working load limit, or design load is the useful working capacity of a sling. This varies, depending upon the type of hitch. The working load limit table indicates, by illustration the applications for which the various loads apply, when the slings are new. All ratings are in tons or 2,000 pounds.

Safety Factor

In general, a safety factor of approximately five is maintained throughout these tables. However, certain sling fittings, such as hooks, which will straighten without breaking, or links, which will deform beyond usefulness before breaking, cannot be assigned a definite numerical safety factor. In such cases, suitable safe loads are listed, based upon wide experience and sound engineering practice.

Sling Care

Proper care and usage are essential for maximum service and safety. Wire rope slings should be protected from sharp bends and cutting edges by means of corner saddles, burlap padding, or wood blocking. Heavy or continuous over-loading should be avoided as well as sudden jerks, which can build up a momentary over-load sufficient to break the sling. Wire rope slings should be stored where they are protected from moisture, and properly coiled when not in use.

4-44

WIRE ROPE SLINGS CAPACITIES – FLEMISH EYE

Allowable Loads in Lbs (S.F. = 5) – 6 x 19 Improved Plow

Rope Dia. Inch				60°	45°	30°
1/4	1120	800	2200	1940	1500	1120
5/16	1740	1280	3400	3000	2400	1740
3/8	2400	1840	4800	4200	3400	2400
7/16	3400	2400	6800	5800	4800	3400
1/2	4400	3200	8800	7600	6200	4400
9/16	5600	4000	11200	9600	7900	5600
5/8	6800	5000	13600	11800	9600	6800
3/4	9800	7200	19600	16900	13800	9800
7/8	13200	9600	26400	22800	18600	13200
1	17000	12600	34000	30000	24000	17000
1 1/8	20000	15800	40000	34600	28300	20000
1/1/4	26000	19400	52000	45000	36700	26000
1 3/8	30000	24000	60000	52000	42400	30000

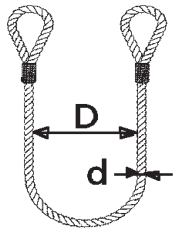

A Basket Hitch has Twice the Capacity of a Single Leg only If the D/d Ratio is 25/1 and the Legs are Vertical

In order for ANY of the above Sling Capacities to be correct the Size of any SHACKLE used Must be One Size GREATER or LARGER

US&R SHORING OPERATIONS GUIDE
REPAIRS, FAQ, GLOSSARY, & ENGINEERING TABLES

WIRE ROPE SLINGS CAPACITIES – FLEMISH EYE

Allowable Loads in Lbs (S.F. = 5) – 6 x 19 Improved Plow

Rope Dia. Inch				60°	45°	30°
1/4	1120	800	2200	1940	1500	1120
5/16	1740	1280	3400	3000	2400	1740
3/8	2400	1840	4800	4200	3400	2400
7/16	3400	2400	6800	5800	4800	3400
1/2	4400	3200	8800	7600	6200	4400
9/16	5600	4000	11200	9600	7900	5600
5/8	6800	5000	13600	11800	9600	6800
3/4	9800	7200	19600	16900	13800	9800
7/8	13200	9600	26400	22800	18600	13200
1	17000	12600	34000	30000	24000	17000
1 1/8	20000	15800	40000	34600	28300	20000
1/1/4	26000	19400	52000	45000	36700	26000
1 3/8	30000	24000	60000	52000	42400	30000

4

A Basket Hitch has Twice the Capacity of a Single Leg only If the D/d Ratio is 25/1 and the Legs are Vertical

In order for ANY of the above Sling Capacities to be correct the Size of any SHACKLE used Must be One Size GREATER or LARGER

4-45

SPECIAL SLING CAPACITY INFORMATION

Wire Rope, Chain & Synthetic Basket Slings

Sling Angle	Capacity as Percent of Single Vertical Hitch
90	200%
60	170%
45	141%
30	100%

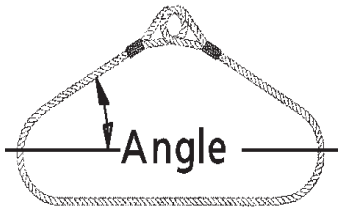

Choker Hitches – Reduction Due to Angle

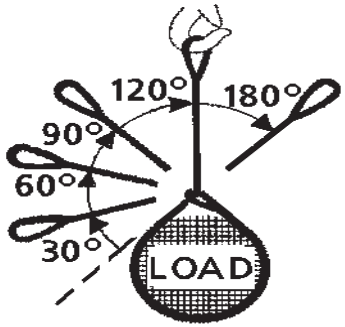

CHOKE ANGLE	CAPACITY
120° - 180°	75% of Vertical
90° - 109°	65% of Vertical
80° - 89°	55% of Vertical
30° - 59°	40% of Vertical

US&R SHORING OPERATIONS GUIDE
REPAIRS, FAQ, GLOSSARY, & ENGINEERING TABLES

SPECIAL SLING CAPACITY INFORMATION

Wire Rope, Chain & Synthetic Basket Slings

Sling Angle	Capacity as Percent of Single Vertical Hitch
90	200%
60	170%
45	141%
30	100%

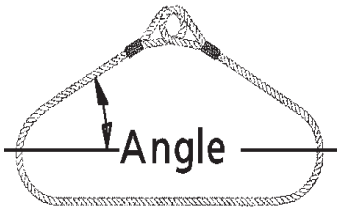

Choker Hitches – Reduction Due to Angle

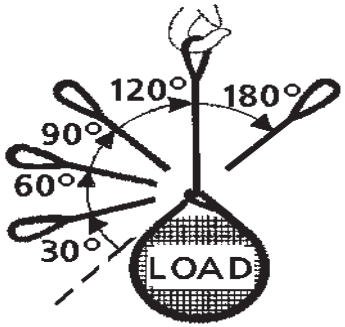

CHOKE ANGLE	CAPACITY
120° - 180°	75% of Vertical
90° - 109°	65% of Vertical
80° - 89°	55% of Vertical
30° - 59°	40% of Vertical

4-46

Wire Rope • Discard Conditions

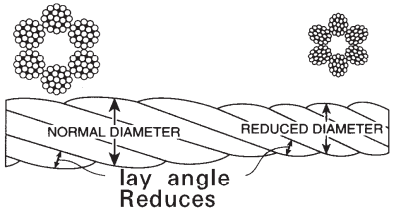

Core Failure

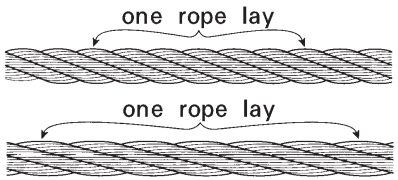

Rope Stretch

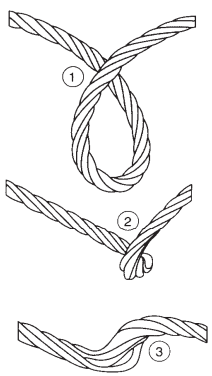

Kinks

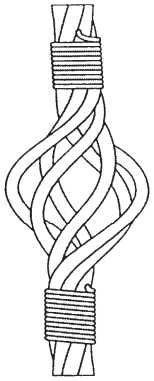

Bird Cage

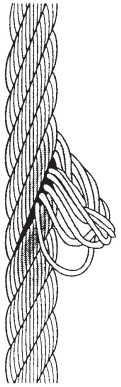

Core Protrude

US&R SHORING OPERATIONS GUIDE
REPAIRS, FAQ, GLOSSARY, & ENGINEERING TABLES

Wire Rope • Discard Conditions

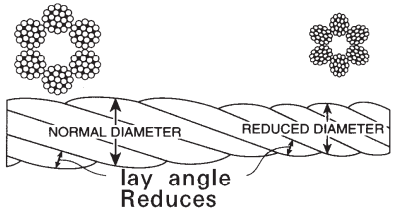

Core Failure

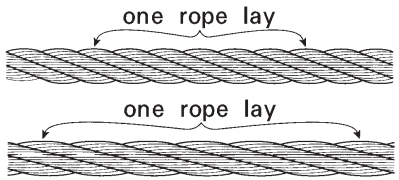

Rope Stretch

4

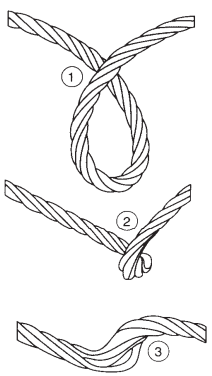

Kinks

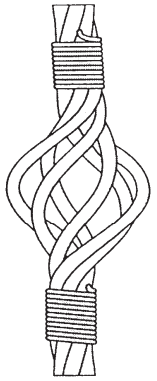

Bird Cage

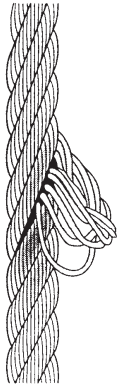

Core Protrude

4-47

Wire Rope Inspection & Replacement

Replace rope if there are:
6 broken wires in one lay
3 broken wires in one strand in one lay
3 broken wires in one lay in Standing Ropes

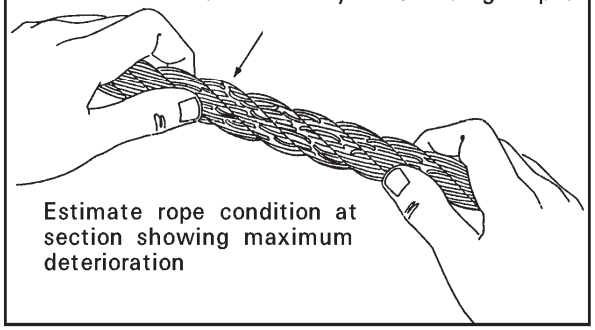

Estimate rope condition at section showing maximum deterioration

Replace if:
1. See criteria above
2. One or more broken wires at a fitting
3. If any wire breaks in the valley between strands.
4. If any wire in a strand is worn by 1/3 it's diameter
5. Reduction in rope diameter should not exceed:
   3/64" for 3/4" rope 1/16" for 7/8 to 1-1/4" ropes
   3/32" for larger ropes
6. Normal stretch for newer ropes can be expected to be 6" in 100' for 6 strand rope and 9" for 8 strand.
7. Corroded, kinked, cut, crushed, heat burnt, or bulging wires indicate improper handling - Discard Conditions

Note that broken wires should not be cut due to sharp edges. Bend wire back and forth until it breaks off inside the rope and is tucked away

Keep ropes well lubricated inside and out to prevent deterioration. Document any broken wires

US&R SHORING OPERATIONS GUIDE
REPAIRS, FAQ, GLOSSARY, & ENGINEERING TABLES

Wire Rope Inspection & Replacement

Replace rope if there are:
6 broken wires in one lay
3 broken wires in one strand in one lay
3 broken wires in one lay in Standing Ropes

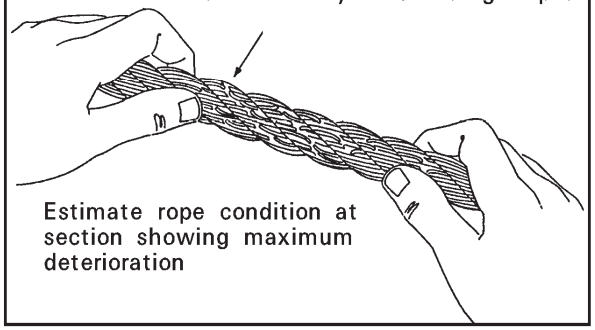

Estimate rope condition at section showing maximum deterioration

Replace if:
1. See criteria above
2. One or more broken wires at a fitting
3. If any wire breaks in the valley between strands.
4. If any wire in a strand is worn by 1/3 it's diameter
5. Reduction in rope diameter should not exceed:
   3/64" for 3/4" rope 1/16" for 7/8 to 1-1/4" ropes
   3/32" for larger ropes
6. Normal stretch for newer ropes can be expected to be 6" in 100' for 6 strand rope and 9" for 8 strand.
7. Corroded, kinked, cut, crushed, heat burnt, or bulging wires indicate improper handling - Discard Conditions

Note that broken wires should not be cut due to sharp edges. Bend wire back and forth until it breaks off inside the rope and is tucked away

Keep ropes well lubricated inside and out to prevent deterioration. Document any broken wires

4-48

WIRE ROPE SOCKET TERMINATIONS

- Swaged & Spelter Sockets are used on standing ropes and permanent ropes like pendants.
- Wedge Sockets are used to attach Crane Whip Line to the Headache Ball, etc.
  Do not attach dead end to live with wire rope clip.

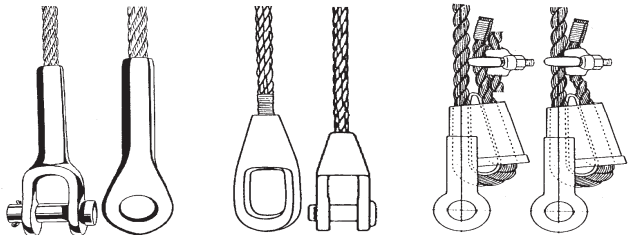

Swaged Socket (100%) | **Spelter Socket (100%)** | **O.K. NO Wedge Socket (75 to 90%)**

WIRE ROPE LOOP TERMINATIONS

- Without thimble, eye efficiency may be reduced as much as 10%.
- Wire Rope Clips must be properly installed.

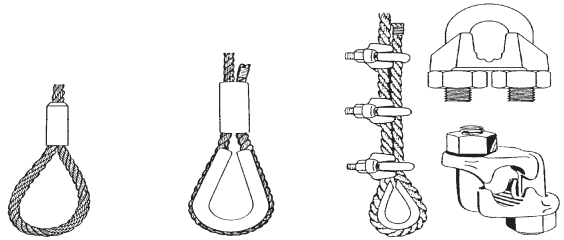

Flemish Eye Eye (95-100%) | **Fold Back Eye (Don't use for lifting)** | **Wire Rope Clips U bolt & Fist Grip (80%)**

US&R SHORING OPERATIONS GUIDE
REPAIRS, FAQ, GLOSSARY, & ENGINEERING TABLES

WIRE ROPE SOCKET TERMINATIONS

- Swaged & Spelter Sockets are used on standing ropes and permanent ropes like pendants.
- Wedge Sockets are used to attach Crane Whip Line to the Headache Ball, etc.
  Do not attach dead end to live with wire rope clip.

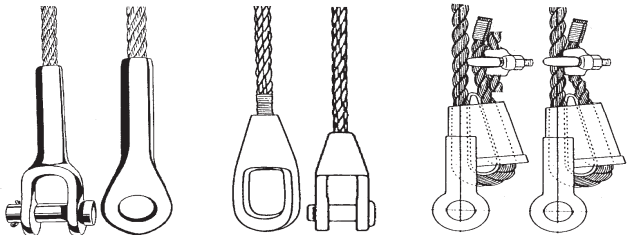

Swaged Socket (100%) | Spelter Socket (100%) | O.K. NO Wedge Socket (75 to 90%)

4

WIRE ROPE LOOP TERMINATIONS

- Without thimble, eye efficiency may be reduced as much as 10%.
- Wire Rope Clips must be properly installed.

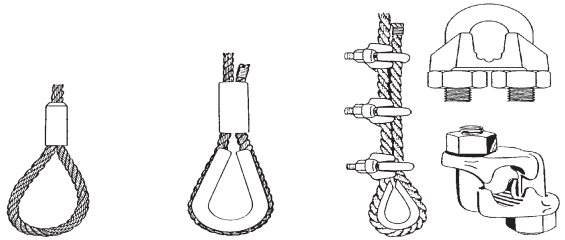

Flemish Eye Eye (95-100%) | Fold Back Eye (Don't use for lifting) | Wire Rope Clips U bolt & Fist Grip (80%)

4-49

WIRE ROPE CLIP INSTALLATION

1. Turnback, place 1st clip & torque/tighten
2. Place 2nd clip only snug, no torque
3. Place other clips at equal spacing
4. Apply some tension and torque/tighten
5. Recheck torque after initial operations

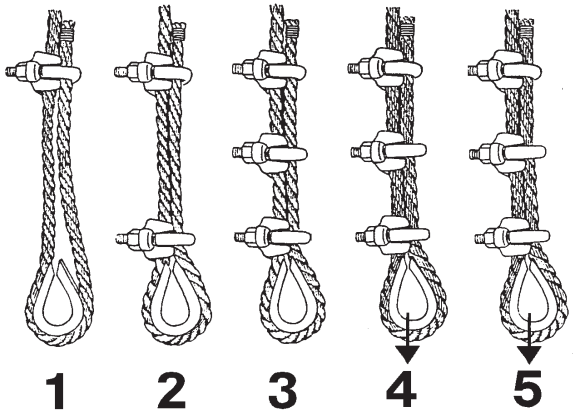

WIRE ROPE CLIP SPLICES

1. Use two loop ends with thimble eye
2. Overlap rope, use twice number clips reqd for 1 loop
3. Clips must be properly installed

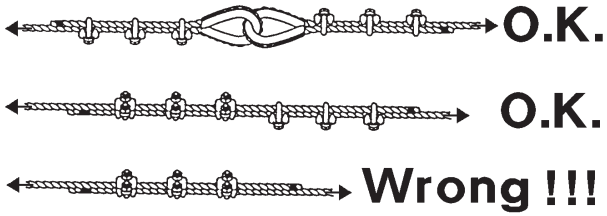

US&R SHORING OPERATIONS GUIDE
REPAIRS, FAQ, GLOSSARY, & ENGINEERING TABLES

WIRE ROPE CLIP INSTALLATION

1. Turnback, place 1st clip & torque/tighten
2. Place 2nd clip only snug, no torque
3. Place other clips at equal spacing
4. Apply some tension and torque/tighten
5. Recheck torque after initial operations

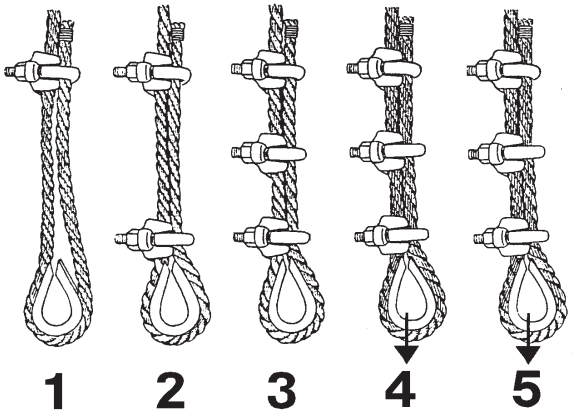

WIRE ROPE CLIP SPLICES

1. Use two loop ends with thimble eye
2. Overlap rope, use twice number clips reqd for 1 loop
3. Clips must be properly installed

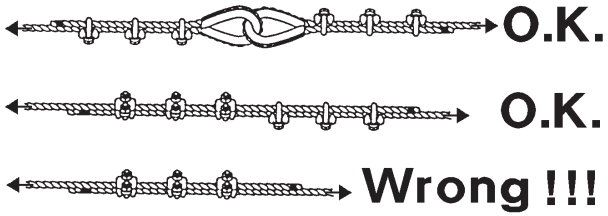

4-50

SYNTHETIC SLING INFORMATION

- Must include manufacturer's sewn on Tag. (Gives Fiber Type & Safe Working Load)
- Provided with seamless protective cover.
- Use corner protection.
- Need careful Inspection.
- Slings stretch as much as 10%, Polyethylene 1%.

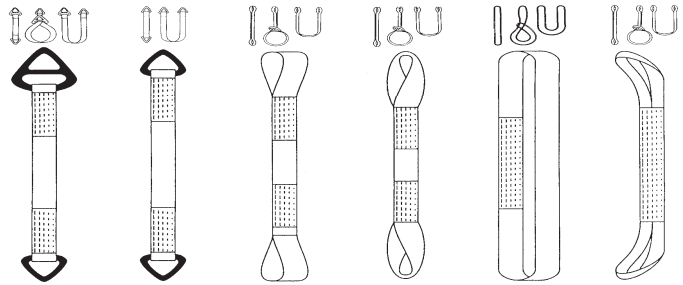

ENDLESS ROUND SLING CAPACITY

Safe Working Load, in pounds

COLOR	Wt #/ft	Vertical	Choker	Basket
Purple	0.2	2,650 lb	2,120	5,300
Black	0.25	4,000	3,200	8,000
Green	0.3	5,300	4,240	10,600
Yellow	0.4	8,400	6,720	16,800
Tan	0.55	10,600	8,500	21,200
Red	0.6	13,200	10,560	26,400
White	0.9	16,800	13,400	33,600
Blue	1.0	21,200	17,000	42,400
Grey	2.15	31,000	24,800	62,000

US&R SHORING OPERATIONS GUIDE
REPAIRS, FAQ, GLOSSARY, & ENGINEERING TABLES
SYNTHETIC SLING INFORMATION
- Must include manufacturer's sewn on Tag. (Gives Fiber Type & Safe Working Load)
- Provided with seamless protective cover.
- Use corner protection.
- Need careful Inspection.
- Slings stretch as much as 10%, Polyethylene 1%.

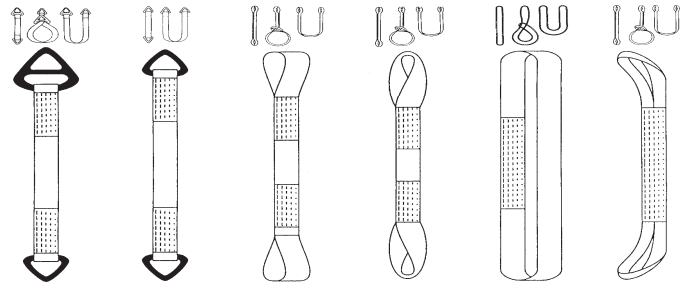

4
ENDLESS ROUND SLING CAPACITY
Safe Working Load, in pounds

COLOR	Wt #/ft	Vertical	Choker	Basket
Purple	0.2	2,650 lb	2,120	5,300
Black	0.25	4,000	3,200	8,000
Green	0.3	5,300	4,240	10,600
Yellow	0.4	8,400	6,720	16,800
Tan	0.55	10,600	8,500	21,200
Red	0.6	13,200	10,560	26,400
White	0.9	16,800	13,400	33,600
Blue	1.0	21,200	17,000	42,400
Grey	2.15	31,000	24,800	62,000

4-51

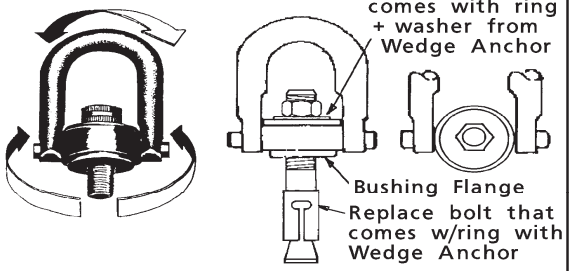

Allowable Tension & Shear Loads

Expansion Bolt Dia.	Working Load of Ring (lbs)	Working Load of Anchor (lbs)	Required Torque (ft-lbs)
3/8	1000	1200	25
1/2	2500	2000	50
5/8	4000	2700	100
3/4	5000	3700	225

CAST STEEL HOIST RINGS

EYE NUTS

Forged, Quenched & Tempered

- Place over installed Wedge Anch
- Safe Working Load for Vertical Tension Load is Same as Anchor
- Working load at 45° is 25% of Vertical Tension Load
- Recommended for Vertical or nearly vertical loading ONLY

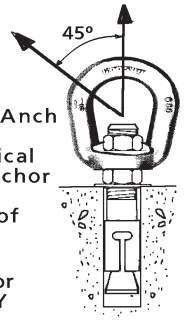

US&R SHORING OPERATIONS GUIDE
REPAIRS, FAQ, GLOSSARY, & ENGINEERING TABLES

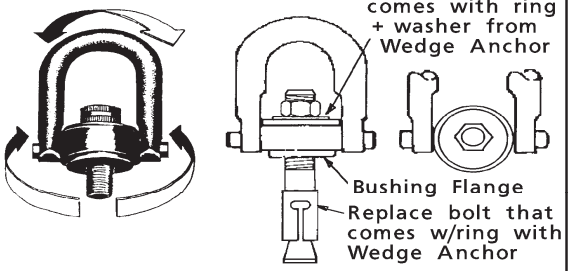

Allowable Tension & Shear Loads

Expansion Bolt Dia.	Working Load of Ring (lbs)	Working Load of Anchor (lbs)	Required Torque (ft-lbs)
3/8	1000	1200	25
1/2	2500	2000	50
5/8	4000	2700	100
3/4	5000	3700	225

CAST STEEL HOIST RINGS

EYE NUTS

Forged, Quenched & Tempered

- Place over installed Wedge Anch
- Safe Working Load for Vertical Tension Load is Same as Anchor
- Working load at 45° is 25% of Vertical Tension Load
- Recommended for Vertical or nearly vertical loading ONLY

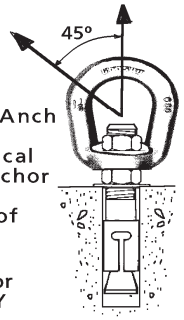

4-52

WEDGE ANCHORS

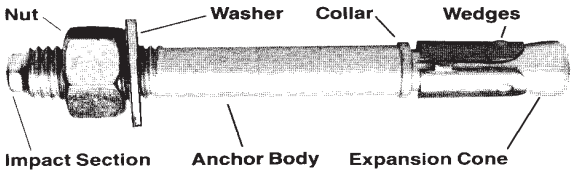

Kwik-bolt, Wedge-all or Trubolt

Allowable Tensile Loads (lbs)

Diameter	Embedment	Required Torque (ft-lb)	f'_c = 2000 psi	f'_c = 3000 psi
3/8″	1 5/8″	20	530	605
	2 1/2″	use 25	1130	1210
	4 1/4″	25	1200	1230
1/2″	2 1/4″	40	870	970
	3 1/2″	use 50	1750	2000
	6″	65	1970	2170
5/8″	2 3/4″	85	1430	1690
	4″	use 100	2170	2670
	7″	110	3000	3270
3/4″	3 1/4″	150	1850	2180
	4 3/4″	use 225	2750	3630
	8″	235	3750	4630
1″	4 1/2″	250	2930	3650
	6″	use 350	4000	5310
	9″	450	6070	7070

Allowable Shear Loads (lbs)

Diameter	Embedment	f'_c = 2000 psi	f'_c = 3000 psi
3/8″	1 5/8″	930	970
	≥ 2 1/2″ *	1100	1100
1/2″	2 1/4″	1810	1840
	≥ 3 1/2″ *	1840	1840
5/8″	2 3/4″	2880	2880
	≥ 4″ * *	3140	3140
3/4″	3 1/4″	3880	3880
	≥ 4 3/4″ * *	4220	4220
1″	4 1/2″	6620	7120
	≥ 6″	8620	8620

US&R SHORING OPERATIONS GUIDE
REPAIRS, FAQ, GLOSSARY, & ENGINEERING TABLES

WEDGE ANCHORS

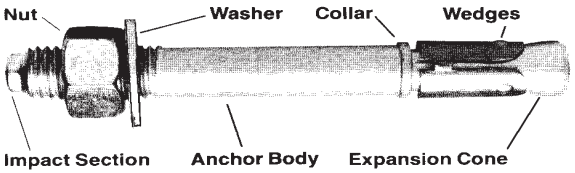

Kwik-bolt, Wedge-all or Trubolt

Allowable Tensile Loads (lbs)

Diameter	Embedment	Required Torque (ft-lb)	f'_c = 2000 psi	f'_c = 3000 psi
3/8″	1 5/8″	20	530	605
	2 1/2″	use 25	1130	1210
	4 1/4″	25	1200	1230
1/2″	2 1/4″	40	870	970
	3 1/2″	use 50	1750	2000
	6″	65	1970	2170
5/8″	2 3/4″	85	1430	1690
	4″	use 100	2170	2670
	7″	110	3000	3270
3/4″	3 1/4″	150	1850	2180
	4 3/4″	use 225	2750	3630
	8″	235	3750	4630
1″	4 1/2″	250	2930	3650
	6″	use 350	4000	5310
	9″	450	6070	7070

Allowable Shear Loads (lbs)

Diameter	Embedment	f'_c = 2000 psi	f'_c = 3000 psi
3/8″	1 5/8″	930	970
	≥ 2 1/2″ *	1100	1100
1/2″	2 1/4″	1810	1840
	≥ 3 1/2″ *	1840	1840
5/8″	2 3/4″	2880	2880
	≥ 4″ * *	3140	3140
3/4″	3 1/4″	3880	3880
	≥ 4 3/4″ * *	4220	4220
1″	4 1/2″	6620	7120
	≥ 6″	8620	8620

4-53

4

CONCRETE SCREW INFORMATION

INFO on 1/4″ SCREWS
(by Hilti or ITW Buildex)

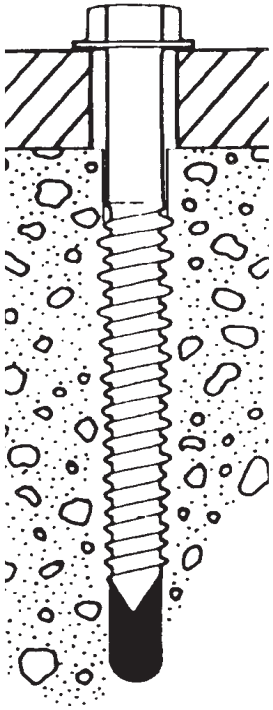

- Use to connect devices. (WBMS & Smartlevel)
- HammerDrill hole, 5/32″ bit.
- Drive with Driver Drill & ¼″ Hex Socket.
- Use 1/4″ x 1 ¼ ″ screw with 1″ min embed.
- Design Load/Allowable Load = 175 lb Ten. & 350 lb Shear

INFO on 3/8″ SCREWS
(by Simpson StrongTie)

- As alternative to wedge anch for lifting concrete.
- Drill 5″ min hole w/ 3/8″ bit.
- Drive w/Socket or Impact Wrench & 9/16″ Socket.
- Use 3/8″ x 6″ TITAN Screw with 4 ½″ min. embed.
- Design Load/Allowable Load = 2000 lb Tension & Shear.
- Use with Swivel Hoist Ring or Steel Tee. (WT 3x7.5 x 0' - 4″)

US&R SHORING OPERATIONS GUIDE
REPAIRS, FAQ, GLOSSARY, & ENGINEERING TABLES

CONCRETE SCREW INFORMATION

INFO on 1/4″ SCREWS
(by Hilti or ITW Buildex)

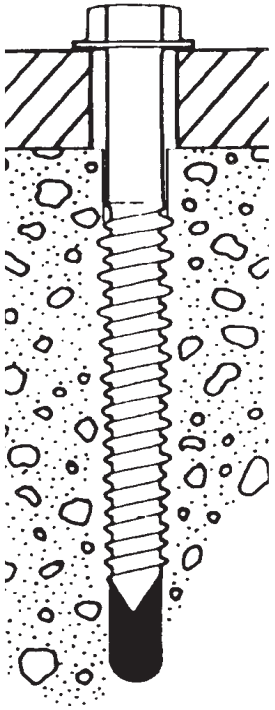

- Use to connect devices. (WBMS & Smartlevel)
- HammerDrill hole, 5/32″ bit.
- Drive with Driver Drill & ¼″ Hex Socket.
- Use 1/4″ x 1 ¼ ″ screw with 1″ min embed.
- Design Load/Allowable Load = 175 lb Ten. & 350 lb Shear

INFO on 3/8″ SCREWS
(by Simpson StrongTie)

- As alternative to wedge anch for lifting concrete.
- Drill 5″ min hole w/ 3/8″ bit.
- Drive w/Socket or Impact Wrench & 9/16″ Socket.
- Use 3/8″ x 6″ TITAN Screw with 4 ½″ min. embed.
- Design Load/Allowable Load = 2000 lb Tension & Shear.
- Use with Swivel Hoist Ring or Steel Tee. (WT 3x7.5 x 0' - 4″)

4-54

HURST- AIRSHORE RESCUE STRUT

- Adjustable aluminum, pneumatic struts. (**May use up to 50 psi air pressure to gently extend these struts).**
- See **Section 2 & 3** for other recommendations.
- **Struts are available in various ranges of length (** F strut = 7 to 11 ft, E strut = 4 to 7 ft, long) see Manufacturers Data for available lengths.
- Use adjustable collar and double pin system to transfer load from inner to outer tube.
- Listed loads are for use of 3 ½″ O.D. struts with **SWIVEL ENDS and WITH or WITHOUT ONE 6ft, or 4ft EXTENSION placed on large (3 ½″) end.**
- Adequacy of supporting material under strut, and need for header and sole should be verified by a competent Professional Engineer.

RECOMMENDED DESIGN STRENGTH AIRSHORE STRUTS USED IN US&R

4

Length Feet	Recommended Load lbs (kg)	Comment
16 ft	3000lbs (1350 kg)	Use strut plus extension
15	3400 (1530)	or single adjustable strut
14	3800 (1710)	″
13	5000 (2250)	″
12	7000 (3150)	″
11	10,000 (4500)	″
10	12,000 (5400)	Do not use extensions
9	14,000 (6400)	″
8	15,000 (6800)	″
7	18,000 (8200)	″
6 ft & less	20,000 (9100 kg)	Max. Recommended Load for Airshore Strut

US&R SHORING OPERATIONS GUIDE
REPAIRS, FAQ, GLOSSARY, & ENGINEERING TABLES

HURST- AIRSHORE RESCUE STRUT

- Adjustable aluminum, pneumatic struts. (**May use up to 50 psi air pressure to gently extend these struts).**
- See **Section 2 & 3** for other recommendations.
- **Struts are available in various ranges of length (** F strut = 7 to 11 ft, E strut = 4 to 7 ft, long) see Manufacturers Data for available lengths.
- Use adjustable collar and double pin system to transfer load from inner to outer tube.
- Listed loads are for use of 3 ½″ O.D. struts with **SWIVEL ENDS and WITH or WITHOUT ONE 6ft, or 4ft EXTENSION placed on large (3 ½″) end.**
- Adequacy of supporting material under strut, and need for header and sole should be verified by a competent Professional Engineer.

RECOMMENDED DESIGN STRENGTH AIRSHORE STRUTS USED IN US&R

4

Length Feet	Recommended Load lbs (kg)	Comment
16 ft	3000lbs (1350 kg)	Use strut plus extension
15	3400 (1530)	or single adjustable strut
14	3800 (1710)	″
13	5000 (2250)	″
12	7000 (3150)	″
11	10,000 (4500)	″
10	12,000 (5400)	Do not use extensions
9	14,000 (6400)	″
8	15,000 (6800)	″
7	18,000 (8200)	″
6 ft & less	20,000 (9100 kg)	Max. Recommended Load for Airshore Strut

4-55

AIRSHORE RAKER SHORE SYSTEM

- System is made from 2 rakers spaced 8ft max. apart with X bracing. See **Section 3.**
- **Use adjustable struts With or Without one 4 ft or 6 ft extension per strut, placed on large end.**
- Raker Systems should be configured with the angle between the Raker and the Ground being between 40 and 60 degrees.
- Add 12″ long, 4″ high, ½″ thick angles to Base Plates to provide a vertical bearing surface.
- Rakers should be attached to the wall surface and restrained at the ground as in timber rakers.
- The Safe Working Strength for a pair of Airshore Rakers used in US&R should be determined by a US&R Structure Specialist from the following chart: (If rakers have mid-braces (each way), use 10,000 lbs per pair of rakers).
  (Safe Horizontal load at Point of Insertion)

RECOMMENDED DESIGN STRENGTH
AIRSHORE RAKER SYSTEM at 45degrees

Raker Length	Height to Point of Insertion	Horizontal Load on 2 Rakers w/ X-bracing
16 ft	11.0 ft	4250 lbs (1930 kg)
15 ft	10.5 ft	4800 lbs (2180 kg)
14 ft	10.0 ft	5400 lbs (2450 kg)
13 ft	9.0 ft	7100 lbs (3220 kg)
12 ft	8.5 ft	10,000lbs (4540 kg)

AIRSHORE RAKER SYSTEM at 60degrees

16 ft	13.8 ft	3000 lbs (1360 kg)
15 ft	13.0 ft	3400 lbs (1540 kg)
14 ft	12.0 ft	3800 lbs (1730 kg)
13 ft	11.3 ft	5000 lbs (2270 kg)
12 ft	10.4 ft	7000 lbs (3180 kg)
11 ft	9.5 ft	10,000 lbs (4540 kg)

US&R SHORING OPERATIONS GUIDE
REPAIRS, FAQ, GLOSSARY, & ENGINEERING TABLES

AIRSHORE RAKER SHORE SYSTEM

- System is made from 2 rakers spaced 8ft max. apart with X bracing. See **Section 3.**
- **Use adjustable struts With or Without one 4 ft or 6 ft extension per strut, placed on large end.**
- Raker Systems should be configured with the angle between the Raker and the Ground being between 40 and 60 degrees.
- Add 12″ long, 4″ high, ½″ thick angles to Base Plates to provide a vertical bearing surface.
- Rakers should be attached to the wall surface and restrained at the ground as in timber rakers.
- The Safe Working Strength for a pair of Airshore Rakers used in US&R should be determined by a US&R Structure Specialist from the following chart: (If rakers have mid-braces (each way), use 10,000 lbs per pair of rakers).
  (Safe Horizontal load at Point of Insertion)

RECOMMENDED DESIGN STRENGTH
AIRSHORE RAKER SYSTEM at 45degrees

Raker Length	Height to Point of Insertion	Horizontal Load on 2 Rakers w/ X-bracing
16 ft	11.0 ft	4250 lbs (1930 kg)
15 ft	10.5 ft	4800 lbs (2180 kg)
14 ft	10.0 ft	5400 lbs (2450 kg)
13 ft	9.0 ft	7100 lbs (3220 kg)
12 ft	8.5 ft	10,000lbs (4540 kg)

AIRSHORE RAKER SYSTEM at 60degrees

16 ft	13.8 ft	3000 lbs (1360 kg)
15 ft	13.0 ft	3400 lbs (1540 kg)
14 ft	12.0 ft	3800 lbs (1730 kg)
13 ft	11.3 ft	5000 lbs (2270 kg)
12 ft	10.4 ft	7000 lbs (3180 kg)
11 ft	9.5 ft	10,000 lbs (4540 kg)

4-56

PARATECH LONG SHORE STRUTS (GOLD ANODIZED COLOR)

- Adjustable aluminum, pneumatic struts. Use Acme Nut to transfer load from inner to outer tube. (**May use up to 50 psi air pressure to gently extend these struts**)
- See **Section 2 & 3** for other recommendations.
- Struts are available in three ranges of length. (10 ft to 16 ft, 8 ft to 12 ft and 6 ft to 10 ft long)
- Listed loads are for use of 3 ½" O.D. struts with **SWIVEL ENDS and WITH or WITHOUT ONE 6 ft, 4 ft or 2 ft EXTENSION.**
- Listed loads are **NOT** for **Paratech 3" O.D. LOCK STRUT & ACME THREAD, RESCUE STRUT**. See 2nd page following for Paratech Rescue Struts.
- Adequacy of supporting material under strut, and need for header and sole should be verified by a competent Professional Engineer.

RECOMMENDED DESIGN STRENGTH PARATECH LONG SHORE STRUTS USED IN US&R

Length Feet	Recommended Load lbs (kg)	Comment
16 ft	3500lbs (1600)	Use strut plus extension
15	4500 (2000)	or single adjustable strut
14	5500 (2500)	″
13	6500 (3000)	″
12	7500 (3400)	″
11	10,000 (4500)	″
10	12,000 (5400)	Do not use extensions
9	16,000 (7200)	″
8	20,000 (9100)	″
7 & 6 ft	22,000 (10,000)	″

US&R SHORING OPERATIONS GUIDE
REPAIRS, FAQ, GLOSSARY, & ENGINEERING TABLES

PARATECH LONG SHORE STRUTS (GOLD ANODIZED COLOR)

- Adjustable aluminum, pneumatic struts. Use Acme Nut to transfer load from inner to outer tube. (**May use up to 50 psi air pressure to gently extend these struts**)
- See **Section 2 & 3** for other recommendations.
- Struts are available in three ranges of length. (10 ft to 16 ft, 8 ft to 12 ft and 6 ft to 10 ft long)
- Listed loads are for use of 3 ½" O.D. struts with **SWIVEL ENDS and WITH or WITHOUT ONE 6 ft, 4 ft or 2 ft EXTENSION.**
- Listed loads are **NOT** for **Paratech 3" O.D. LOCK STRUT & ACME THREAD, RESCUE STRUT**. See 2nd page following for Paratech Rescue Struts.
- Adequacy of supporting material under strut, and need for header and sole should be verified by a competent Professional Engineer.

4

RECOMMENDED DESIGN STRENGTH PARATECH LONG SHORE STRUTS USED IN US&R

Length Feet	Recommended Load lbs (kg)	Comment
16 ft	3500lbs (1600)	Use strut plus extension
15	4500 (2000)	or single adjustable strut
14	5500 (2500)	″
13	6500 (3000)	″
12	7500 (3400)	″
11	10,000 (4500)	″
10	12,000 (5400)	Do not use extensions
9	16,000 (7200)	″
8	20,000 (9100)	″
7 & 6 ft	22,000 (10,000)	″

4-57

PARATECH LONG STRUT RAKER SHORE SYSTEM

- System is made from 2 rakers spaced 8ft max. apart with X bracing. See **Section 3.**
- **Use 6 to 10 ft or 8 to 12 ft struts With or Without one 2 ft, 4 ft, or 6 ft extension per strut.**
- Raker Systems should be configured with the angle between the Raker and the Ground being between 40 and 60 degrees.
- Add 12″ long, 4″ high, ½″ thick angles to Base Plates to provide a vertical bearing surface.
- Rakers should be attached to the wall surface and restrained at the ground as in timber systems.
- The Safe Working Strength for a pair of Paratech Rakers used in US&R should be determined by a US&R Structure Specialist from the following chart: (If rakers have mid-braces (each way), use 10,000 lbs per pair of rakers)
  (Safe Horizontal load at Point of Insertion)

RECOMMENDED DESIGN STRENGTH
PARATECH RAKER SYSTEM at 45degrees

Raker Length	Height to Point of Insertion	Horizontal Load on 2 Rakers w/ X-bracing
16 ft	11.0 ft	5000 lbs (2300 kg)
15 ft	10.5 ft	6400 lbs (2900 kg)
14 ft	10.0 ft	7800 lbs (3500 kg)
13 ft	9.0 ft	9200 lbs (4200 kg)
12 ft	8.5 ft	10,600lbs (4800 kg)

PARATECH RAKER SYSTEM at 60degrees

16 ft	13.8 ft	3500 lbs (1600 kg)
15 ft	13.0 ft	4500 lbs (2000 kg)
14 ft	12.0 ft	5500 lbs (2500 kg)
13 ft	11.3 ft	6500 lbs (3000 kg)
12 ft	10.4 ft	7500 lbs (3400 kg)
11 ft	9.5 ft	10,000 lbs (4500 kg)

US&R SHORING OPERATIONS GUIDE
REPAIRS, FAQ, GLOSSARY, & ENGINEERING TABLES

PARATECH LONG STRUT RAKER SHORE SYSTEM

- System is made from 2 rakers spaced 8ft max. apart with X bracing. See Section 3.
- Use 6 to 10 ft or 8 to 12 ft struts With or Without one 2 ft, 4 ft, or 6 ft extension per strut.
- Raker Systems should be configured with the angle between the Raker and the Ground being between 40 and 60 degrees.
- Add 12″ long, 4″ high, ½″ thick angles to Base Plates to provide a vertical bearing surface.
- Rakers should be attached to the wall surface and restrained at the ground as in timber systems.
- The Safe Working Strength for a pair of Paratech Rakers used in US&R should be determined by a US&R Structure Specialist from the following chart: (If rakers have mid-braces (each way), use 10,000 lbs per pair of rakers)
  (Safe Horizontal load at Point of Insertion)

RECOMMENDED DESIGN STRENGTH
PARATECH RAKER SYSTEM at 45degrees

Raker Length	Height to Point of Insertion	Horizontal Load on 2 Rakers w/ X-bracing
16 ft	11.0 ft	5000 lbs (2300 kg)
15 ft	10.5 ft	6400 lbs (2900 kg)
14 ft	10.0 ft	7800 lbs (3500 kg)
13 ft	9.0 ft	9200 lbs (4200 kg)
12 ft	8.5 ft	10,600lbs (4800 kg)

PARATECH RAKER SYSTEM at 60degrees

16 ft	13.8 ft	3500 lbs (1600 kg)
15 ft	13.0 ft	4500 lbs (2000 kg)
14 ft	12.0 ft	5500 lbs (2500 kg)
13 ft	11.3 ft	6500 lbs (3000 kg)
12 ft	10.4 ft	7500 lbs (3400 kg)
11 ft	9.5 ft	10,000 lbs (4500 kg)

4-58

PARATECH RESCUE STRUTS (DARK GREY ANODIZED COLOR)

- Adjustable aluminum, pneumatic struts. Use Acme Nut to transfer load from inner to outer tube.
- See **Section 2 & 3** for other recommendations.
- Struts are available in 1.5 to 2 ft, 2 ft to 3 ft, 3 ft to 5 ft, & 5 ft to 7.2 ft ranges of length. (12″, 24″ & 36″ extensions are also available).
- Listed loads are based on **3 ″ O.D.** struts, tested with swivel ends, with and without one extension.
- **See Pg 4-40 for Paratech 3 ½″ O.D. Long Shore (Gold Color) Struts**
- Adequacy of supporting material under strut, and need for header and sole should be verified by a competent Professional Engineer.
- **The following Load Table is based on tests performed by PARATECH and reviewed by Wiss, Janney, Elstner, Assoc., Engineers**

PARATECH RESCUE STRUTS LOAD TABLE
Based on compression tests using swivel bases

Length Feet	Average Failure Strut Force (Ultimate strength)	Design Strength based on the following Safety Factors	
		3 to 1	4 to 1
2 ft	87,000 lbs	29,000 lbs	21,750 lbs
4 ft	71,750 lbs	23,920 lbs	17,940 lbs
6 ft	56,500 lbs	18,830 lbs	14,125 lbs
8 ft	48,100 lbs	16,030 lbs	12,025 lbs

US&R SHORING OPERATIONS GUIDE
REPAIRS, FAQ, GLOSSARY, & ENGINEERING TABLES

PARATECH RESCUE STRUTS (DARK GREY ANODIZED COLOR)

- Adjustable aluminum, pneumatic struts. Use Acme Nut to transfer load from inner to outer tube.
- See **Section 2 & 3** for other recommendations.
- Struts are available in 1.5 to 2 ft, 2 ft to 3 ft, 3 ft to 5 ft, & 5 ft to 7.2 ft ranges of length. (12″, 24″ & 36″ extensions are also available).
- Listed loads are based on **3 ″ O.D.** struts, tested with swivel ends, with and without one extension.
- **See Pg 4-40 for Paratech 3 ½″ O.D. Long Shore (Gold Color) Struts**
- Adequacy of supporting material under strut, and need for header and sole should be verified by a competent Professional Engineer.
- **The following Load Table is based on tests performed by PARATECH and reviewed by Wiss, Janney, Elstner, Assoc., Engineers**

4

PARATECH RESCUE STRUTS LOAD TABLE
Based on compression tests using swivel bases

Length Feet	Average Failure Strut Force (Ultimate strength)	Design Strength based on the following Safety Factors	
		3 to 1	4 to 1
2 ft	87,000 lbs	29,000 lbs	21,750 lbs
4 ft	71,750 lbs	23,920 lbs	17,940 lbs
6 ft	56,500 lbs	18,830 lbs	14,125 lbs
8 ft	48,100 lbs	16,030 lbs	12,025 lbs

4-59

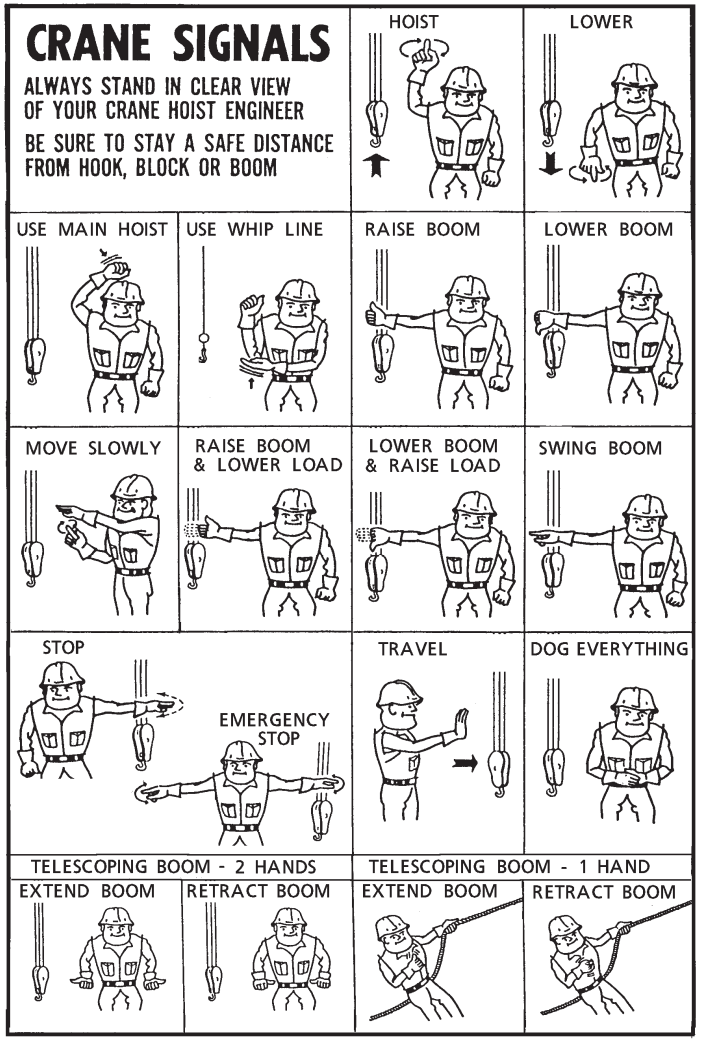

US&R SHORING OPERATIONS GUIDE
REPAIRS, FAQ, GLOSSARY, & ENGINEERING TABLES

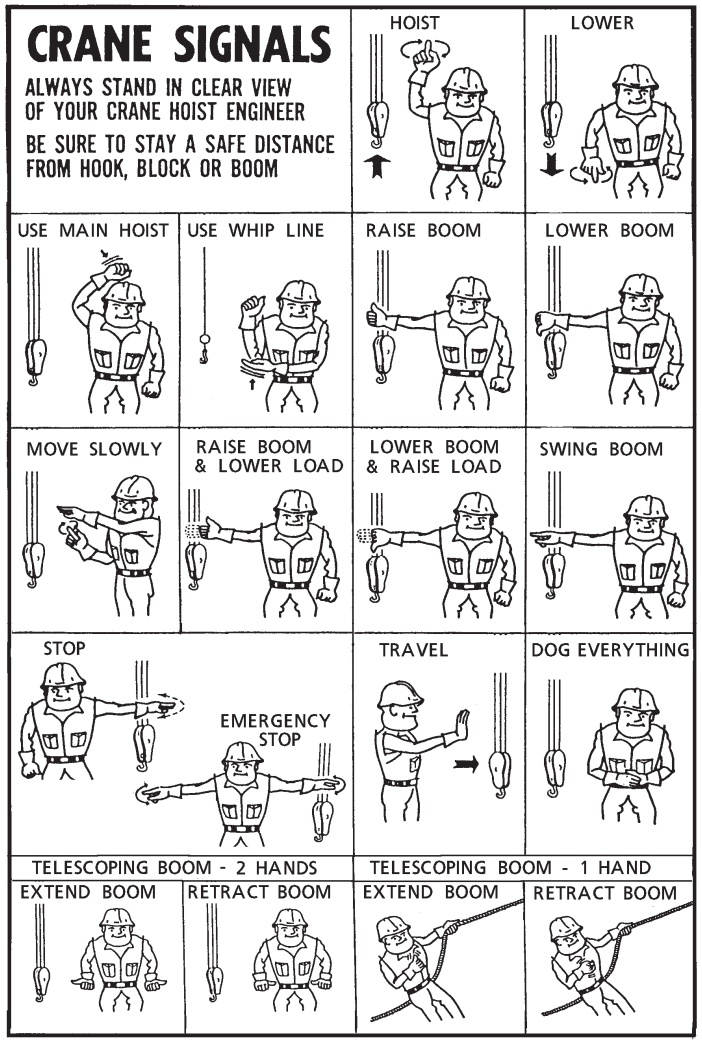

4-60

INTRODUCTION to SECTION R

This section contains information that provides useful data for the Rescue Specialist at the US&R Disaster Site, listed as follows:

- Personnel Assignments Page R-2
- Radio Channels R-3
- Team briefing Components R-4
- Squad POA Requirements R-5
- Rescue Team Manager Duties R-6
- Rescue Squad Officer Duties R-8
- Medevac Procedures R-9
- BOO Requirements R-10
- Strategic Considerations R-21
- Initial Rescue Site Tasks R-22
- Site Assessment Form R-23
- LCES and Cribbing Information R-24
- ICS 214: Unit Activity Log Example R-26

R

US&R SHORING OPERATIONS GUIDE
RESCUE SPECIALIST REFERENCE DATA

INTRODUCTION to SECTION R

This section contains information that provides useful data for the Rescue Specialist at the US&R Disaster Site, listed as follows:

- Personnel Assignments Page R-2
- Radio Channels R-3
- Team briefing Components R-4
- Squad POA Requirements R-5
- Rescue Team Manager Duties R-6
- Rescue Squad Officer Duties R-8
- Medevac Procedures R-9
- BOO Requirements R-10
- Strategic Considerations R-21
- Initial Rescue Site Tasks R-22
- Site Assessment Form R-23
- LCES and Cribbing Information R-24
- ICS 214: Unit Activity Log Example R-26

R

R-1

Personnel Assignments

Rescue Squad:	
Squad Personnel	
Officer:	
1(ASL):	
2:	
3:	
4:	
5:	
HM:	
Medic:	
TFL 1:	TFL 2:
RTM 1:	RTM 2:
LOG 1:	LOG 2:

US&R SHORING OPERATIONS GUIDE
RESCUE SPECIALIST REFERENCE DATA

Personnel Assignments

Rescue Squad:	
Squad Personnel	
Officer:	
1(ASL):	
2:	
3:	
4:	
5:	
HM:	
Medic:	
TFL 1:	TFL 2:
RTM 1:	RTM 2:
LOG 1:	LOG 2:

R-2

Radio Channels	
TFL 1	TFL 2
RTM 1	RTM 2
LOG 1	LOG 2
MED 1	MED 2
BOO 1	BOO 2

R

US&R SHORING OPERATIONS GUIDE
RESCUE SPECIALIST REFERENCE DATA

Radio Channels	
TFL 1	TFL 2
RTM 1	RTM 2
LOG 1	LOG 2
MED 1	MED 2
BOO 1	BOO 2

R

R-3

Team Briefing Components
Situation / Hazard Evaluation:
Operational Period Objectives:
Site Control / Required PPE:
Logistical Support:
Emergency Signals / Procedures:
EMS Plan:
HAZ MAT Concerns:
Communications:
Sketch/Notes:

US&R SHORING OPERATIONS GUIDE
RESCUE SPECIALIST REFERENCE DATA

Team Briefing Components
Situation / Hazard Evaluation:
Operational Period Objectives:
Site Control / Required PPE:
Logistical Support:
Emergency Signals / Procedures:
EMS Plan:
HAZ MAT Concerns:
Communications:
Sketch/Notes:

R-4

Squad POA Requirements

- Sign in/Check in
- Personal Pack inspection
- Vehicle keys
- Contact Information sheet
- Family Support Team information sheet
- Medical review/Shot Record
- MRE/Water
- Communications equipment issue
- Passport (if required)
- Brief Relief issue

R

US&R SHORING OPERATIONS GUIDE
RESCUE SPECIALIST REFERENCE DATA

Squad POA Requirements

- Sign in/Check in
- Personal Pack inspection
- Vehicle keys
- Contact Information sheet
- Family Support Team information sheet
- Medical review/Shot Record
- MRE/Water
- Communications equipment issue
- Passport (if required)
- Brief Relief issue

R

R-5

Rescue Team Manager

General Duties

- Reports to TFL
- Provide input to assist the TFL in developing the tactical objectives
- Coordinate and supervise operations necessary to achieve the tactical objectives
- Determine logistical and organizational needs
- Receive briefings and SITREPs from TFL
- Brief assigned personnel
- Provide situation updates and maintain reports
- Prepare evaluations for assigned personnel

US&R SHORING OPERATIONS GUIDE
RESCUE SPECIALIST REFERENCE DATA

Rescue Team Manager

General Duties

- Reports to TFL
- Provide input to assist the TFL in developing the tactical objectives
- Coordinate and supervise operations necessary to achieve the tactical objectives
- Determine logistical and organizational needs
- Receive briefings and SITREPs from TFL
- Brief assigned personnel
- Provide situation updates and maintain reports
- Prepare evaluations for assigned personnel

R-6

Rescue Team Manager

On Site Duties

- Overall assessment process to determine:
  - Functional requirements
  - Work schedules and rotation periods
  - Adequacy of support facilities
- Coordinate activities with Search & Recon
- Assist in development of team action plan
- Coordinate objectives and personnel assignments
- Ensure proper worksite setup, control & safety
- Evaluate operations and modify as needed
- Evaluate capacity of resources to complete assignment
- Order additional resources as needed
- Resolve coordination, personnel and communication issues
- Provide periodic progress reports to the TFL
- Identify completion of assignments
- Identify availability of resources
- Submit daily reports to Plans
- Ensure proper information exchange at relief or demob
- Notify Logistics of equipment, supply or maintenance issues

US&R SHORING OPERATIONS GUIDE
RESCUE SPECIALIST REFERENCE DATA

Rescue Team Manager

On Site Duties

- Overall assessment process to determine:
  - Functional requirements
  - Work schedules and rotation periods
  - Adequacy of support facilities
- Coordinate activities with Search & Recon
- Assist in development of team action plan
- Coordinate objectives and personnel assignments
- Ensure proper worksite setup, control & safety
- Evaluate operations and modify as needed
- Evaluate capacity of resources to complete assignment
- Order additional resources as needed
- Resolve coordination, personnel and communication issues
- Provide periodic progress reports to the TFL
- Identify completion of assignments
- Identify availability of resources
- Submit daily reports to Plans
- Ensure proper information exchange at relief or demob
- Notify Logistics of equipment, supply or maintenance issues

R

R-7

Rescue Squad Officer

General Duties

- Reports to Rescue Team Manager
- Appoint Assistant Squad Leader (ASL)
- Implement rescue component of the Team Action Plan
- Coordinate and supervise assigned personnel at worksites
- Determine organizational and logistical needs
- Provide situation updates and maintain reports
- Evaluate and modify rescue tactics and methods as needed
- Prepare evaluations for assigned personnel

Rescue Squad Officer

On Site Duties

- Coordinate logistical requirements with Rescue Team Manager and Logistics
- Determine availability of resources
- Evaluate capacity to complete assignment
- Order additional resources as needed
- Make periodic progress reports to the Rescue Team Manager
- Submit daily reports and records to Plans
- Ensure proper information exchange at relief or demob. Notify Rescue Team Manager of equipment, supply or maintenance issues

US&R SHORING OPERATIONS GUIDE
RESCUE SPECIALIST REFERENCE DATA

Rescue Squad Officer

General Duties

- Reports to Rescue Team Manager
- Appoint Assistant Squad Leader (ASL)
- Implement rescue component of the Team Action Plan
- Coordinate and supervise assigned personnel at worksites
- Determine organizational and logistical needs
- Provide situation updates and maintain reports
- Evaluate and modify rescue tactics and methods as needed
- Prepare evaluations for assigned personnel

Rescue Squad Officer

On Site Duties

- Coordinate logistical requirements with Rescue Team Manager and Logistics
- Determine availability of resources
- Evaluate capacity to complete assignment
- Order additional resources as needed
- Make periodic progress reports to the Rescue Team Manager
- Submit daily reports and records to Plans
- Ensure proper information exchange at relief or demob. Notify Rescue Team Manager of equipment, supply or maintenance issues

R-8

Medevac Procedures

Select and Secure Landing Site:

- Size depends on number and type of aircraft
- Ground slope <15 degrees
- Ensure surface free of rocks and debris
- Avoid dust, sand and snow
- Ensure ground firm enough to prevent aircraft from bogging down during loading/unloading
- At approach/departure ends, clearly mark obstructions that cannot be removed
- Ensure 10:1 horizontal clearance to vertical obstructions
- Mark landing/touchdown site
- Use smoke, signalman and or lights
- When dark, mark touchdown point with inverted “Y” composed of four lights

R

US&R SHORING OPERATIONS GUIDE
RESCUE SPECIALIST REFERENCE DATA

Medevac Procedures

Select and Secure Landing Site:

- Size depends on number and type of aircraft
- Ground slope <15 degrees
- Ensure surface free of rocks and debris
- Avoid dust, sand and snow
- Ensure ground firm enough to prevent aircraft from bogging down during loading/unloading
- At approach/departure ends, clearly mark obstructions that cannot be removed
- Ensure 10:1 horizontal clearance to vertical obstructions
- Mark landing/touchdown site
- Use smoke, signalman and or lights
- When dark, mark touchdown point with inverted “Y” composed of four lights

R

R-9

Medevac Procedures

Night Marking of Landing Zones

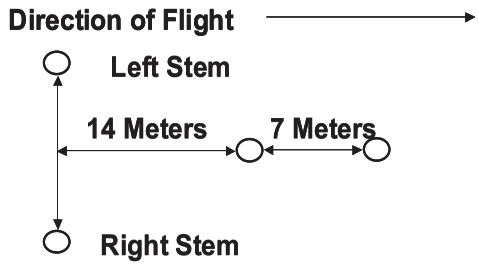

Note: The touchdown point will be midpoint of the legs of the “Y”. If more than 1 small aircraft will land, add 1 additional light at the exact point each is to land. If more than 1 large aircraft will land, add 2 lights placed 10mm apart aligned in the direction of flight.

Helicopter Hand Signals

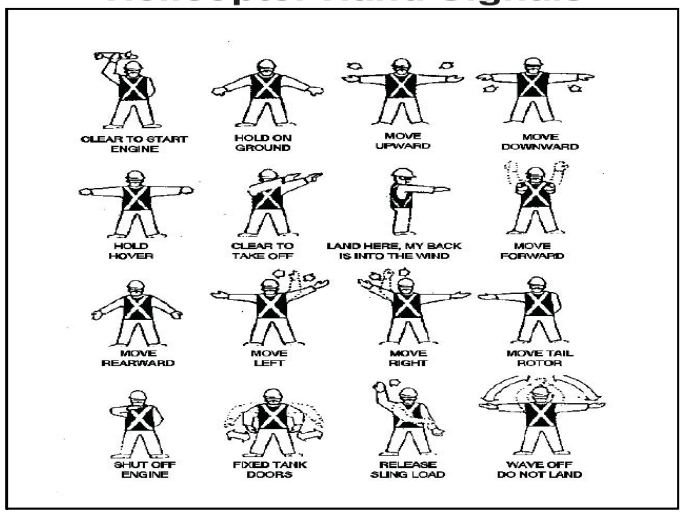

US&R SHORING OPERATIONS GUIDE
RESCUE SPECIALIST REFERENCE DATA

Medevac Procedures

Night Marking of Landing Zones

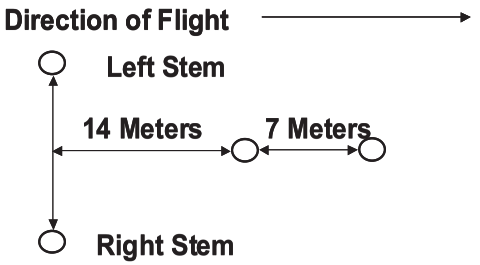

Note: The touchdown point will be midpoint of the legs of the “Y”. If more than 1 small aircraft will land, add 1 additional light at the exact point each is to land. If more than 1 large aircraft will land, add 2 lights placed 10mm apart aligned in the direction of flight.

Helicopter Hand Signals

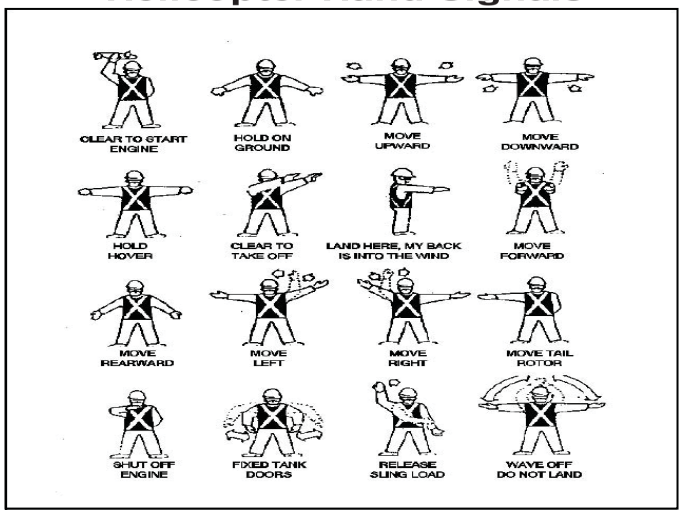

R-10

BOO Site Requirements

Preferred Size 200x200ft (61x61m)

Minimum size 110x150ft (33.5x46m)

- Cultural/social considerations
- Access to work sites
- Runoff/flooding
- Noise considerations
- Utilities
- Damaged structures
- Prevailing winds/air hazards

BOO Setup Priorities

Task	Priority
Cache setup and organization	1
Task Force Command Center	1
Medical	1
Personnel Shelters	1
Sanitation/Hygiene	2
Community Tent	3
Canine Shelter	3
Security/Hazards (constant)	N/A

R

US&R SHORING OPERATIONS GUIDE
RESCUE SPECIALIST REFERENCE DATA

BOO Site Requirements

Preferred Size 200x200ft (61x61m)

Minimum size 110x150ft (33.5x46m)

- Cultural/social considerations
- Access to work sites
- Runoff/flooding
- Noise considerations
- Utilities
- Damaged structures
- Prevailing winds/air hazards

BOO Setup Priorities

Task	Priority
Cache setup and organization	1
Task Force Command Center	1
Medical	1
Personnel Shelters	1
Sanitation/Hygiene	2
Community Tent	3
Canine Shelter	3
Security/Hazards (constant)	N/A

R

R-11

BOO Setup Assignments

- **Squad 1:**
  - **Assigned to tent _____**
- **Squad 2:**
  - **Assigned to tent _____**
  - **Personnel Shelter setup (Priority 1)**
- **Squad 3:**
  - **Assigned to tent _____**
  - **Cache setup & organization (Priority 1)**
- **Squad 4:**
  - **Assigned to tent _____**
  - **Cache setup & organization (Priority 1)**

US&R SHORING OPERATIONS GUIDE
RESCUE SPECIALIST REFERENCE DATA

BOO Setup Assignments

- Squad 1:
  - Assigned to tent _____
- Squad 2:
  - Assigned to tent _____
  - Personnel Shelter setup (Priority 1)
- Squad 3:
  - Assigned to tent _____
  - Cache setup & organization (Priority 1)
- Squad 4:
  - Assigned to tent _____
  - Cache setup & organization (Priority 1)

R-12

BOO Setup Responsibilities

- **Site Requirements (Immediate)**
  - Task Force Leader, Rescue Team Manager, Log Chief & Comm Specialists
- **Cache Setup and Organization (Priority 1)**
  - **Log Chief, Log Specialists, Squads 3 & 4**
- **TFCC Setup (Priority 1)**
  - **Task Force Leader, Plans Chief, Comm Specialists, Technical Info Specialist & Safety**
- **Medical Treatment Area Setup (Priority 1)**
  - **Medical Manager & Medical Specialists**
- **Personnel Shelter Setup (Priority 1)**
  - **Squad 2**
- **Sanitation/Hygiene Issues (Priority 2)**
  - **Safety**
- **Canine Exercise Area (Priority 3)**
  - **Search Team Manager & Canine Specialists**
- **Community Tent Setup (Priority 3)**
  - **Log Chief & Technical Info Specialist**

US&R SHORING OPERATIONS GUIDE
RESCUE SPECIALIST REFERENCE DATA

BOO Setup Responsibilities

- Site Requirements (Immediate)
  - Task Force Leader, Rescue Team Manager, Log Chief & Comm Specialists
- Cache Setup and Organization (Priority 1)
  - Log Chief, Log Specialists, Squads 3 & 4
- TFCC Setup (Priority 1)
  - Task Force Leader, Plans Chief, Comm Specialists, Technical Info Specialist & Safety
- Medical Treatment Area Setup (Priority 1)
  - Medical Manager & Medical Specialists
- Personnel Shelter Setup (Priority 1)
  - Squad 2
- Sanitation/Hygiene Issues (Priority 2)
  - Safety
- Canine Exercise Area (Priority 3)
  - Search Team Manager & Canine Specialists
- Community Tent Setup (Priority 3)
  - Log Chief & Technical Info Specialist

R

R-13

BOO Setup Procedure

(Preferred Size, 200x200ft (61x61m))

- **Minimum Size, 110x150ft (33.5x46m)**
- **Utilize Advance Team Kit**
  - **2 - 100ft tapes, roll fireline tape, BOO signs, digital camera, vests, chalk, binoculars & paint**
- **Layout and identify sections with signs and fireline tape**
- **Entrance should be adjacent to main access or travel route**
- **Mark ground for location, dimension and spacing of each section and tent**
- **Identify travel/access routes Ensure fire extinguishers and signs are present**
- **Generators placed on perimeter near section to be powered**
- **Identify remote fuel storage area**
- **Post signs for all sections and each tent**

US&R SHORING OPERATIONS GUIDE
RESCUE SPECIALIST REFERENCE DATA

BOO Setup Procedure

(Preferred Size, 200x200ft (61x61m))

- Minimum Size, 110x150ft (33.5x46m)
- Utilize Advance Team Kit
  - 2 - 100ft tapes, roll fireline tape, BOO signs, digital camera, vests, chalk, binoculars & paint
- Layout and identify sections with signs and fireline tape
- Entrance should be adjacent to main access or travel route
- Mark ground for location, dimension and spacing of each section and tent
- Identify travel/access routes Ensure fire extinguishers and signs are present
- Generators placed on perimeter near section to be powered
- Identify remote fuel storage area
- Post signs for all sections and each tent

R-14

BOO Setup (Cache) Procedures

- Size (approximately) 50x60ft (15x18m)
- Layout/mark Cache area adjacent to BOO entrance and main travel/access
- Post conspicuous sign
- Mark perimeter with fireline tape and establish entry control point
- Mark location/layout for cache setup
  - 4 rows Rescue
  - 1 row Technical
  - 1 row WMD (as needed)
  - 1 row Logistics
- Erect 19x35ft Western Shelter tent for weather sensitive equipment and office
- Provide electricity and light
- Identify empty boxes for counter space/seating
- Provide tarps/sheeting for weather/security

US&R SHORING OPERATIONS GUIDE
RESCUE SPECIALIST REFERENCE DATA

BOO Setup (Cache) Procedures

- Size (approximately) 50x60ft (15x18m)
- Layout/mark Cache area adjacent to BOO entrance and main travel/access
- Post conspicuous sign
- Mark perimeter with fireline tape and establish entry control point
- Mark location/layout for cache setup
  - 4 rows Rescue
  - 1 row Technical
  - 1 row WMD (as needed)
  - 1 row Logistics
- Erect 19x35ft Western Shelter tent for weather sensitive equipment and office
- Provide electricity and light
- Identify empty boxes for counter space/seating
- Provide tarps/sheeting for weather/security

R

R-15

BOO Setup (TFCP) Procedures

- Size (approximately) 40x30ft (12x9m)
- Mark perimeter with fireline tape and post sign
- Identify high ground/elevated structures for communications
- Erect 2 19x19ft Western Shelter tents
- Provide electricity and light
- Retrieve/setup all office supplies and forms
- Establish the following:
  - Command and Control
  - Workspace
  - Communications
  - Equipment setup
  - Plans/Technical Information workspace

US&R SHORING OPERATIONS GUIDE
RESCUE SPECIALIST REFERENCE DATA

BOO Setup (TFCP) Procedures

- Size (approximately) 40x30ft (12x9m)
- Mark perimeter with fireline tape and post sign
- Identify high ground/elevated structures for communications
- Erect 2 19x19ft Western Shelter tents
- Provide electricity and light
- Retrieve/setup all office supplies and forms
- Establish the following:
  - Command and Control
  - Workspace
  - Communications
  - Equipment setup
  - Plans/Technical Information workspace

R-16

BOO Setup (Medical) Procedures

- Size (approximately) 25x50ft (7.5x15m)
- Mark perimeter with fireline tape and post sign
- Erect 19x35ft Western Shelter tent
- Provide electricity and light
- Establish the following:
  - Patient treatment area, with privacy
  - Acute care equipment
  - Office workspace with shelving and seating

BOO Setup (Shelter) Procedures

- Size (approximately) 80x110ft (24x33.5m)
- Mark perimeter with fireline tape and post sign
- Erect Personnel Shelter tents
- Provide electricity and lighting
- Provide smoke & carbon monoxide detectors and fire extinguishers
- Affix identification signs to tents
- Consider weather and runoff issues

US&R SHORING OPERATIONS GUIDE
RESCUE SPECIALIST REFERENCE DATA

BOO Setup (Medical) Procedures

- Size (approximately) 25x50ft (7.5x15m)
- Mark perimeter with fireline tape and post sign
- Erect 19x35ft Western Shelter tent
- Provide electricity and light
- Establish the following:
  - Patient treatment area, with privacy
  - Acute care equipment
  - Office workspace with shelving and seating

BOO Setup (Shelter) Procedures

- Size (approximately) 80x110ft (24x33.5m)
- Mark perimeter with fireline tape and post sign
- Erect Personnel Shelter tents
- Provide electricity and lighting
- Provide smoke & carbon monoxide detectors and fire extinguishers
- Affix identification signs to tents
- Consider weather and runoff issues

R

R-17

BOO Setup (Sanitation/Hygiene) Procedures

- Size (approximately) 25x25ft (7.5x7.5m)
- Mark perimeter with fireline tape and post sign
- Setup a minimum of 4 “Brief Relief” stations
- Provide lighting
- Set up hand washing and or wet wipe stations
- Place trash receptacles throughout BOO (segregate food scraps)
- Setup up Gross decon station at BOO entry points
- Request trash collection from local resources
- Collect and dispose of trash 2x daily (segregate food scraps)
- Request “Port-A-Potties” from local resources

BOO Setup (Community Tent) Procedures

- Size (approximately) 25x35ft (7.5x10.5m)
- Mark perimeter with fireline tape and post sign
- Erect 19x35ft Western Shelter tent
- Provide electricity and lighting
- Establish seating/eating area
- Establish hand washing/clean up area
- Setup up task force bulletin boards

US&R SHORING OPERATIONS GUIDE
RESCUE SPECIALIST REFERENCE DATA

BOO Setup (Sanitation/Hygiene) Procedures

- Size (approximately) 25x25ft (7.5x7.5m)
- Mark perimeter with fireline tape and post sign
- Setup a minimum of 4 “Brief Relief” stations
- Provide lighting
- Set up hand washing and or wet wipe stations
- Place trash receptacles throughout BOO (segregate food scraps)
- Setup up Gross decon station at BOO entry points
- Request trash collection from local resources
- Collect and dispose of trash 2x daily (segregate food scraps)
- Request “Port-A-Potties” from local resources

BOO Setup (Community Tent) Procedures

- Size (approximately) 25x35ft (7.5x10.5m)
- Mark perimeter with fireline tape and post sign
- Erect 19x35ft Western Shelter tent
- Provide electricity and lighting
- Establish seating/eating area
- Establish hand washing/clean up area
- Setup up task force bulletin boards

R-18

BOO Setup (Security/Hazards) Procedures

- Identify/Mark Hazards within or adjacent to the BOO
- Isolate fuel storage
- Provide fire extinguisher at fuel storage and refueling locations
- Post “No Smoking” signs as appropriate
- Cover cache, supplies and equipment as appropriate
- Request additional generators/lighting for improved safety/security
- Post and announce plan for evacuation and assembly points
- Identify availability of local police/military

BOO Setup Tent Assignments

Assignment	Tent
TFL, RTM, Safety, Plans, TIS ENG	A
TFL, RTM, Safety, Plans, TIS ENG	B
Squad 3 & HM Specialist	C
Squad 1 & HM Specialist	D
Squad 4 & Driver/Mechanic	E
Squad 2 & Driver/Mechanic	F
Canine Specialists & Canines	G
STM, Search Specs. & HER Spec.	H
Non-Task Force Personnel	I
Medical Personnel	Medical
Communications Personnel	Comm
Logistics Personnel	Log

R

US&R SHORING OPERATIONS GUIDE
RESCUE SPECIALIST REFERENCE DATA

BOO Setup (Security/Hazards) Procedures

- Identify/Mark Hazards within or adjacent to the BOO
- Isolate fuel storage
- Provide fire extinguisher at fuel storage and refueling locations
- Post “No Smoking” signs as appropriate
- Cover cache, supplies and equipment as appropriate
- Request additional generators/lighting for improved safety/security
- Post and announce plan for evacuation and assembly points
- Identify availability of local police/military

BOO Setup Tent Assignments

Assignment	Tent
TFL, RTM, Safety, Plans, TIS ENG	A
TFL, RTM, Safety, Plans, TIS ENG	B
Squad 3 & HM Specialist	C
Squad 1 & HM Specialist	D
Squad 4 & Driver/Mechanic	E
Squad 2 & Driver/Mechanic	F
Canine Specialists & Canines	G
STM, Search Specs. & HER Spec.	H
Non-Task Force Personnel	I
Medical Personnel	Medical
Communications Personnel	Comm
Logistics Personnel	Log

R

R-19

Tent Assignments and Sample Layout

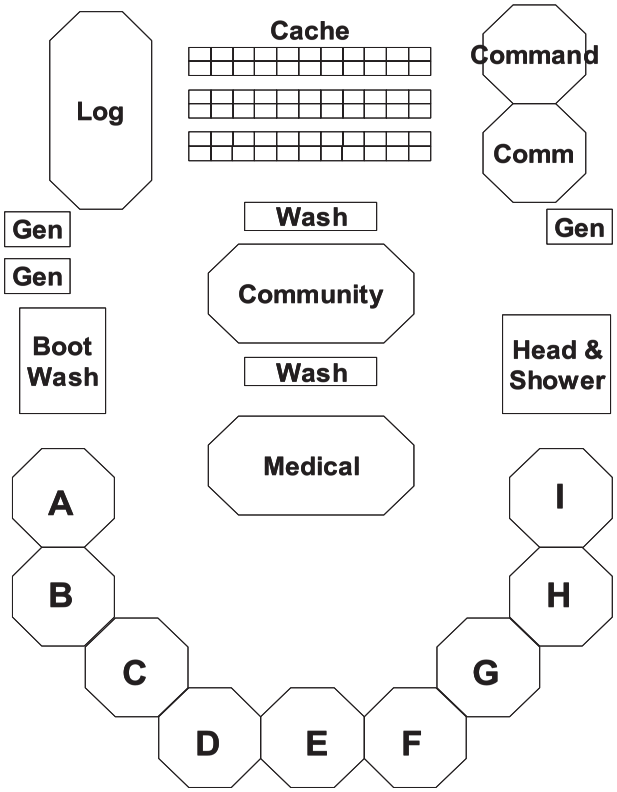

US&R SHORING OPERATIONS GUIDE
RESCUE SPECIALIST REFERENCE DATA

Tent Assignments and Sample Layout

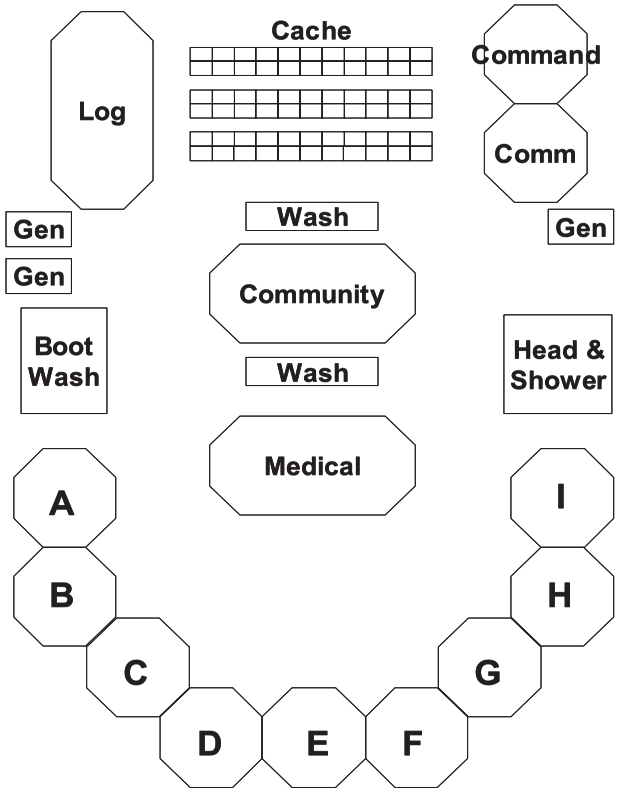

R-20

Strategic Considerations The most effective rescue strategy should blend all viable tactical capabilities into a logical plan of operation. The general strategic considerations are outlined as follows:

Rescue Site Management and Coordination Each rescue work site must have one person in charge to maintain unity of command. The Rescue Squad Officer of each rescue squad is responsible for all activities of the assigned rescue site including safety when a single squad operates alone. At large or complex rescue operations that require the commitment of two or more rescue squads to a single operation, the Rescue Team Manager may assume command or assign one of the Rescue Squad Officers to be in charge of the site. A Safety Officer should be identified at each rescue site.

Search Phases There are generally five phases of organized search and rescue operations at collapse incidents:

- **Phase One:** Assessment of the collapse area.
- **Phase Two:** Removal of all surface victims as quickly and safely as possible.
- **Phase Three:** Search and rescue of victims from accessible void spaces.
- **Phase Four:** Selected debris removal to locate and rescue victims.
- **Phase Five:** General debris removal. Usually conducted after all known victims have been removed.

US&R SHORING OPERATIONS GUIDE
RESCUE SPECIALIST REFERENCE DATA

Strategic Considerations The most effective rescue strategy should blend all viable tactical capabilities into a logical plan of operation. The general strategic considerations are outlined as follows:

Rescue Site Management and Coordination Each rescue work site must have one person in charge to maintain unity of command. The Rescue Squad Officer of each rescue squad is responsible for all activities of the assigned rescue site including safety when a single squad operates alone. At large or complex rescue operations that require the commitment of two or more rescue squads to a single operation, the Rescue Team Manager may assume command or assign one of the Rescue Squad Officers to be in charge of the site. A Safety Officer should be identified at each rescue site.

Search Phases There are generally five phases of organized search and rescue operations at collapse incidents:

- **Phase One:** Assessment of the collapse area.
- **Phase Two:** Removal of all surface victims as quickly and safely as possible.
- **Phase Three:** Search and rescue of victims from accessible void spaces.
- **Phase Four:** Selected debris removal to locate and rescue victims.
- **Phase Five:** General debris removal. Usually conducted after all known victims have been removed.

R

R-21

Initial Rescue Site Tasks

- Area sketch/map and building ID (if no Rapid Structure Triage)
- Structural/Hazard evaluation and marking
- Building sketch/plan, include building cross section
- Building type/configuration, include size, occupancy type, & stories
- Collapse type, and Void Locations
- Hazard locations, and Mitigation notes
- Best access
- Area/building search
- Search/assessment marking
- Assess void space and atmospheric conditions
- Victim location identification
- Sketch search area and record information
- Communicate findings to appropriate manager

US&R SHORING OPERATIONS GUIDE
RESCUE SPECIALIST REFERENCE DATA

Initial Rescue Site Tasks

- Area sketch/map and building ID (if no Rapid Structure Triage)
- Structural/Hazard evaluation and marking
- Building sketch/plan, include building cross section
- Building type/configuration, include size, occupancy type, & stories
- Collapse type, and Void Locations
- Hazard locations, and Mitigation notes
- Best access
- Area/building search
- Search/assessment marking
- Assess void space and atmospheric conditions
- Victim location identification
- Sketch search area and record information
- Communicate findings to appropriate manager

R-22

Site Assessment

Date:	Time:	Site#:
Type of Occupancy:		
GPS:		
# of levels:		
Above ground:		
Below ground:		
Possible # of victims/location:		
Hazards:		
Utilities controlled: Electricity ☐ Gas ☐	Water ☐ Other ☐	

R

US&R SHORING OPERATIONS GUIDE
RESCUE SPECIALIST REFERENCE DATA

Site Assessment

Date:	Time:	Site#:
Type of Occupancy:		
GPS:		
# of levels:		
Above ground:		
Below ground:		
Possible # of victims/location:		
Hazards:		
Utilities controlled: Electricity ☐ Gas ☐	Water ☐ Other ☐	

R

R-23

Other assets on site:

Witness reports/Intel/Notes:

Sketch:

US&R SHORING OPERATIONS GUIDE
RESCUE SPECIALIST REFERENCE DATA

Other assets on site:

Witness reports/Intel/Notes:

Sketch:

R-24

LCES

Lookouts

- Appoint site Safety Officer
- Observe only

Communications

- Request radio channel(s)
- Review evacuation signals

Escape Routes

- Pre-established path to safe area

Safe Zones

- Pre-established areas of refuge
- Pre-identified assembly area

Cribbing

- 4x4 - 6000lbs (2700kg) per full contact point (Recommended Maximum Height = 4'-0")
- 6x6 - 15,000lbs (6750kg) per full contact point (Recommended Maximum Height = 6'-0")
- Overlap corners by 4” (10cm)
- Up to 15 degree slope max. (3 feet in 10 feet)

Allowable Height to Width Ratios

All bearing	3 to 1
Lifting or moving	2 to 1
2 of 4 bearing	1.5 to 1
1 of 4 bearing	1 to 1

US&R SHORING OPERATIONS GUIDE
RESCUE SPECIALIST REFERENCE DATA

LCES

Lookouts

- Appoint site Safety Officer
- Observe only

Communications

- Request radio channel(s)
- Review evacuation signals

Escape Routes

- Pre-established path to safe area

Safe Zones

- Pre-established areas of refuge
- Pre-identified assembly area

Cribbing

- 4x4 - 6000lbs (2700kg) per full contact point (Recommended Maximum Height = 4'-0")
- 6x6 - 15,000lbs (6750kg) per full contact point (Recommended Maximum Height = 6'-0")
- Overlap corners by 4” (10cm)
- Up to 15 degree slope max. (3 feet in 10 feet)

Allowable Height to Width Ratios

All bearing	3 to 1
Lifting or moving	2 to 1
2 of 4 bearing	1.5 to 1
1 of 4 bearing	1 to 1

R-25

R

Unit Activity Log **ICS 214**	**1.** Incident Name:	**2.** Date:	**3.** Time:
4. Rescue Squad:	**5.** Leader:	**6.** Operational Period:	

7.	**Rescue Squad Roster**
	RS 1 (ASL):
	RS 2:
	RS 3:
	RS 4:
	RS 5:
	HazMat:
	Medic:

8.	**Activity Log** (cont. on reverse)
Time:	Major Events:

US&R SHORING OPERATIONS GUIDE
RESCUE SPECIALIST REFERENCE DATA

Unit Activity Log **ICS 214**	**1.** Incident Name:	**2.** Date:	**3.** Time:
4. Rescue Squad:	**5.** Leader:	**6.** Operational Period:	

7.	**Rescue Squad Roster**
	RS 1 (ASL):
	RS 2:
	RS 3:
	RS 4:
	RS 5:
	HazMat:
	Medic:

8.	**Activity Log** (cont. on reverse)
Time:	Major Events:

R-26